3120786

CONDO.

BIRCH TREE CONDOMINIUM, PHASE I

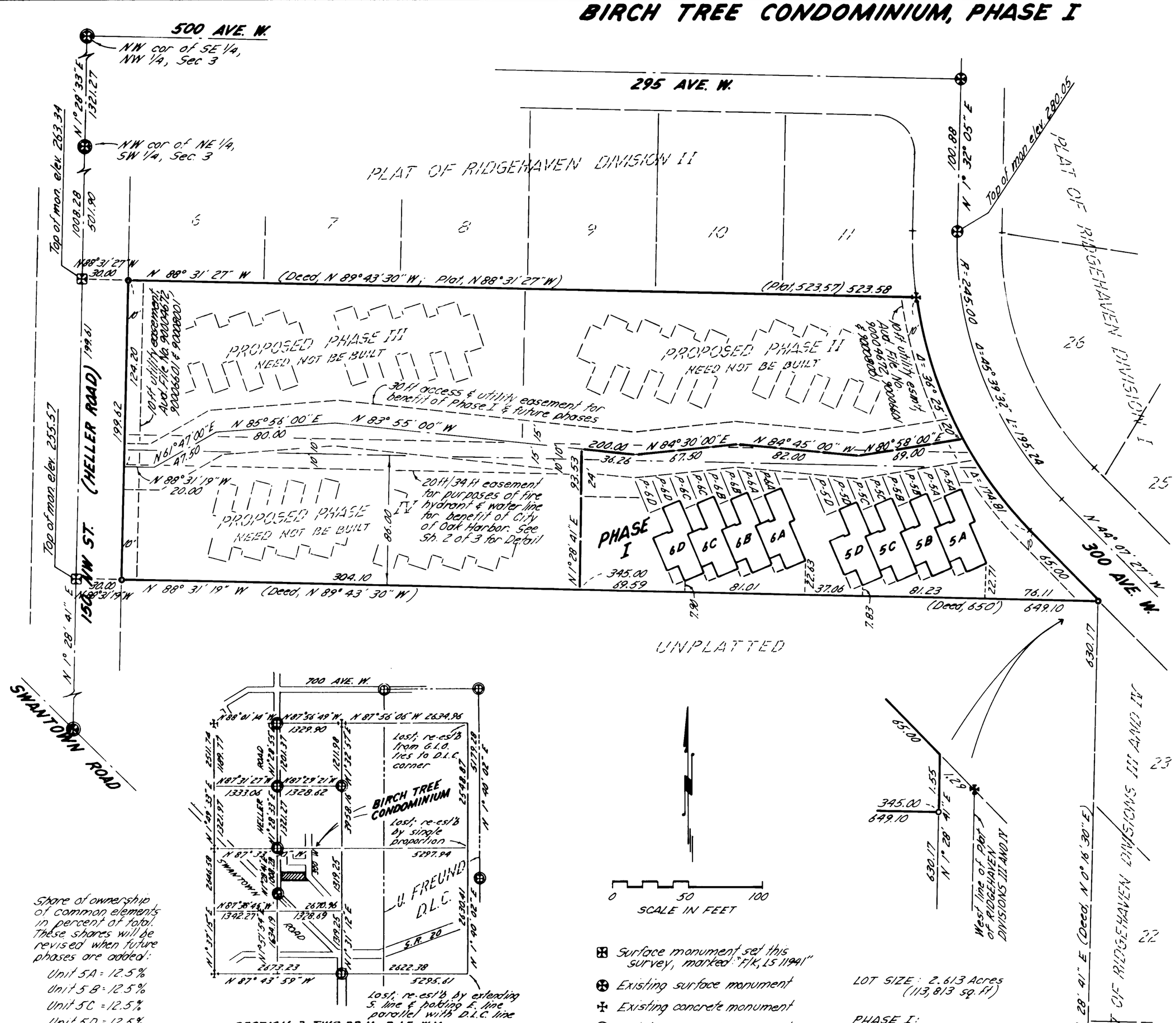

Share of ownership of common elements in percent of total. These shares will be revised when future phases are added:

- Unit 5A = 12.5%
- Unit 5B = 12.5%
- Unit 5C = 12.5%
- Unit 5D = 12.5%
- Unit 6A = 12.5%
- Unit 6B = 12.5%
- Unit 6C = 12.5%
- Unit 6D = 12.5%

Bearing system shown is based on Washington Coordinate System, N Zone

Elevations shown are based on City of Oak Harbor Datum (U.S.C. & G.S. Mean Sea Level = 100.00 feet)

- Surface monument set this survey, marked "F/K, LS 11941"
- Existing surface monument
- Existing concrete monument
- Existing concrete monument, in case
- Iron pipe set this survey, marked: "F/K, LS 11941"

NOTE: The locations of buildings in proposed Phases II, III & IV are approximate and are set forth herein to show development rights of the proposed future phases.

LOT SIZE: 2.613 Acres (113,813 sq. ft)

PHASE I:
Area – 28,805 sq ft
Building size –
Bldg 5: 3675 sq ft
Bldg 6: 3675 sq ft
Percent landscaping – 40%

LAND DESCRIPTION OF PHASE I AND PROPOSED FUTURE PHASES II, III & IV (Ref. A.F. 376594)

That portion of the Northeast Quarter of the Southwest Quarter of Section 3, Township 32 North, Range 1 East of the Willamette Meridian, Island County, Washington, described as follows:

Beginning at a point that lies North 88° 50' 56" West 647.39 feet and North 00° 16' 30" East 630.17 feet from the Southeast corner of said Northeast Quarter of the Southwest Quarter of Section 3, Township 32 North, Range 1 East, W.M.; thence
North 00° 16' 30" East 200.00 feet; thence
North 89° 43' 30" West 650.00 feet to the East boundary of Heller Road; thence
Southerly along the East boundary of Heller Road 200.00 feet to an iron pipe; thence
South 89° 43' 30" East 650.00 feet to the Point of Beginning.

EXCEPT that portion dedicated to the Plat of RIDGEHAVEN DIVISION I, recorded in Volume 13 of Plats, page 56, dated May 5, 1987.

PHASE I, being a portion of the aforedescribed tract, is described as follows:
Beginning at the Southeast corner of said tract; thence
North 88° 31' 19" West along the South line thereof, a distance of 345.00 feet; thence
North 01° 28' 41" East 93.53 feet; thence
South 83° 55' 00" East 36.26 feet; thence
North 84° 30' 00" East 67.50 feet; thence
South 84° 45' 00" East 82.00 feet; thence
North 80° 58' 00" East 69.00 feet to the East boundary of the aforedescribed tract; thence
Southerly along said East boundary to the Point of Beginning.

TREASURER'S CERTIFICATE
I hereby certify that there are no delinquent special assessments and all special assessments on any of the property herein contained dedicated as streets, alleys or for other public use are paid in full.
This 7 day of Dec, 1990.
Terry A. Hicks
CITY FINANCE DIRECTOR

All taxes levied which have become a lien upon the lands herein described have been fully paid and discharged according to the records of my office, including taxes for the current year, 1991.
by: Bernice E. Bainbridge, Deputy
COUNTY TREASURER

APPROVAL
Approved by me this 7 day of DEC., 1990.
William J. Koepke
WILLIAM J. KOEPKE
OAK HARBOR BUILDING OFFICIAL

DECLARATION
Recorded 19th of Dec. 1990, in Volume 604, pages _____, under Auditor's File No. 90023203, records of Island County, Washington.

DECLARANTS DEDICATION AND CERTIFICATE OF COMPLETION
Recorded Dec 19, 1990, under Auditor's File No. 90023204, records of Island County, Washington

SURVEYOR'S CERTIFICATE:
This map correctly represents a survey made by me or under my direction in conformance with the requirements of the Survey Recording Act at the request of Island Construction in Nov., 1990
Robert D. Cray
Certificate No. 11941 12/5/90

ROBERT D. CRAY State of Washington 11941 Registered Professional Land Surveyor

AUDITOR'S CERTIFICATE:
Filed for record this 19th day of December 1990 at 2:15 P.M. in Condominium Plans, Page _____ at the request of Fakkema & Kingma, Inc. under Auditor's File No. 90023203
Harry N. Ferris, Auditor
by Deputy
County Auditor

MAP OF BIRCH TREE CONDOMINIUM, PHASE I

SEC. 3, T. 32 N., R. 1 E., W.M. OAK HARBOR, ISLAND COUNTY, WASHINGTON

SURVEYED BY: E.G.H. DATE: Sept. 90 FLD. BK.: 1-72, 1-73	FAKKEMA & KINGMA, INC. CONSULTING ENGINEERS & SURVEYORS 4086 400th Ave. West Oak Harbor, Wa. 98277 675-5973	SCALE: 1" = 50'	PROJECT NO.: 3039
DRAWN BY: ERF DATE: Sept. 90 CKD. BY:		VOLUME OF SURVEYS, PAGE	

SHEET 1 OF 3

SR 886

90023203 Pg 1 of 3

3120786

CONDO.

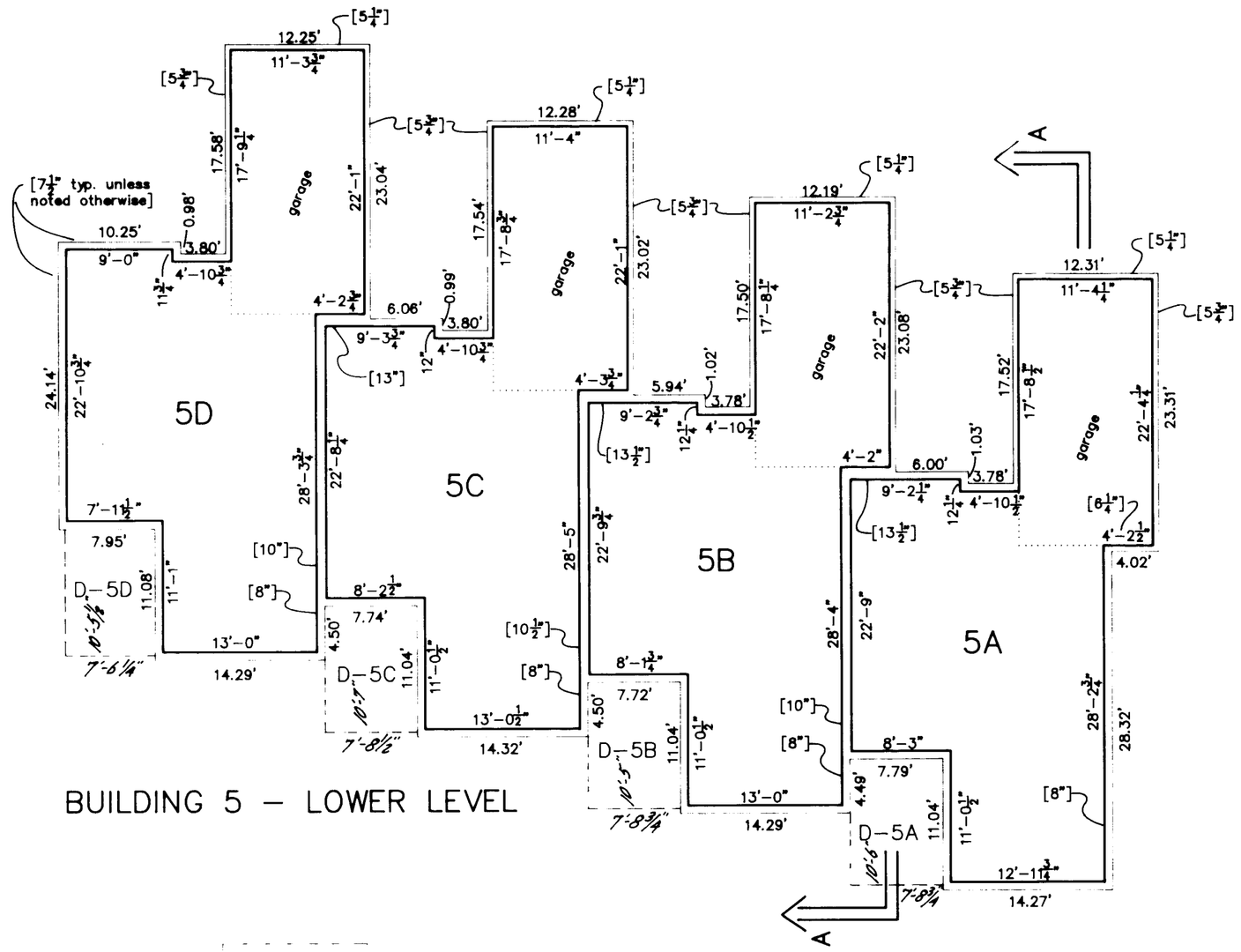

BUILDING 5 – LOWER LEVEL

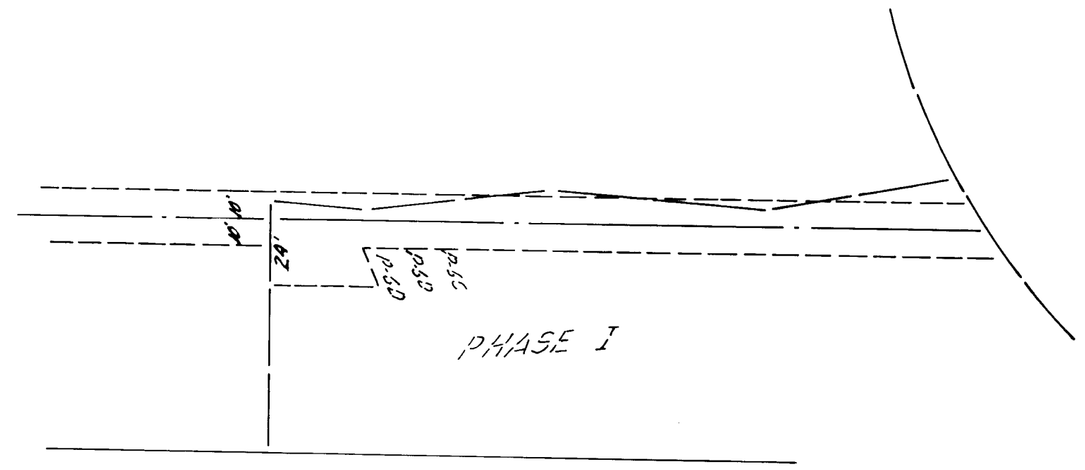

FIRE HYDRANT & WATER LINE EASEMENT DETAIL

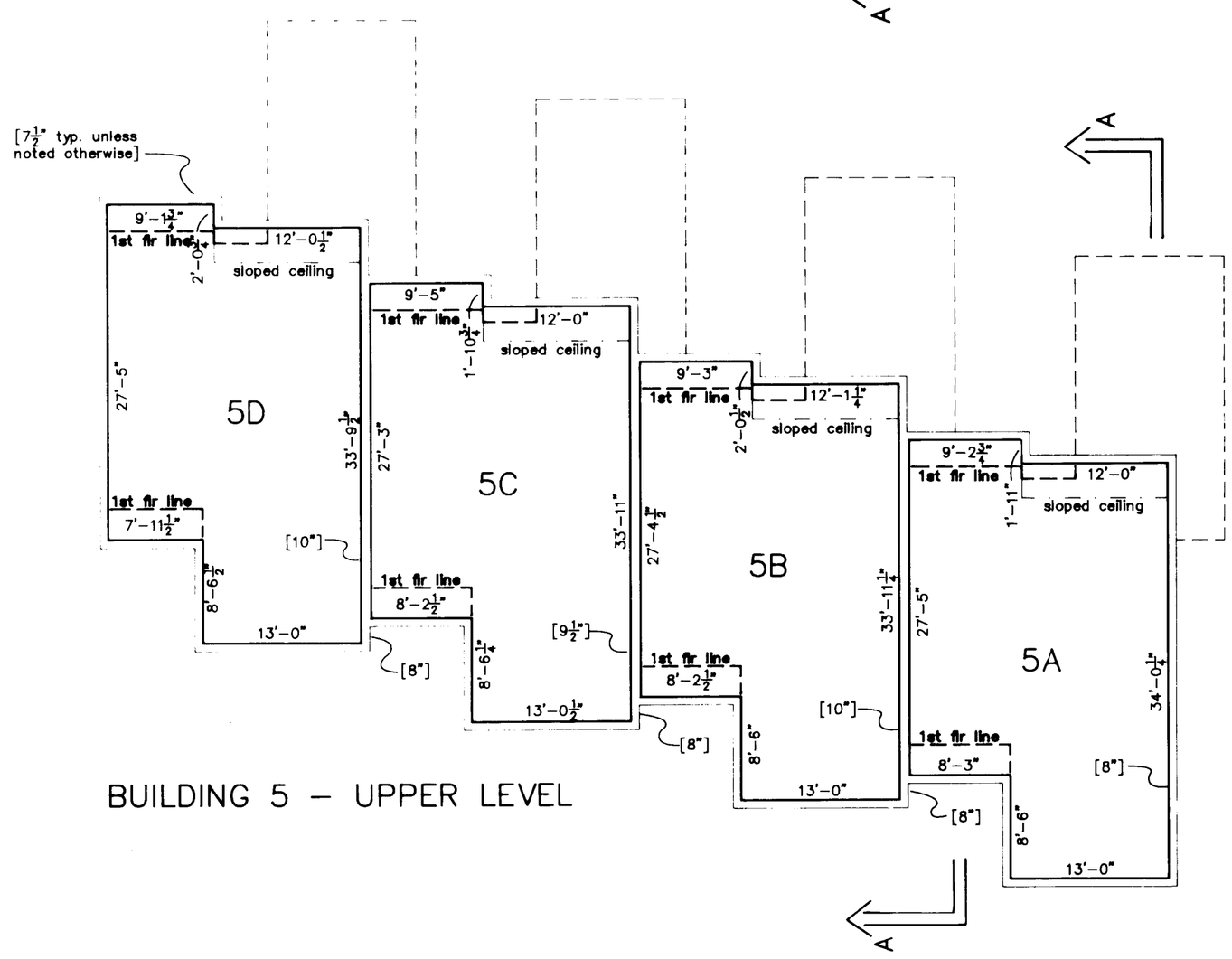

BUILDING 5 – UPPER LEVEL

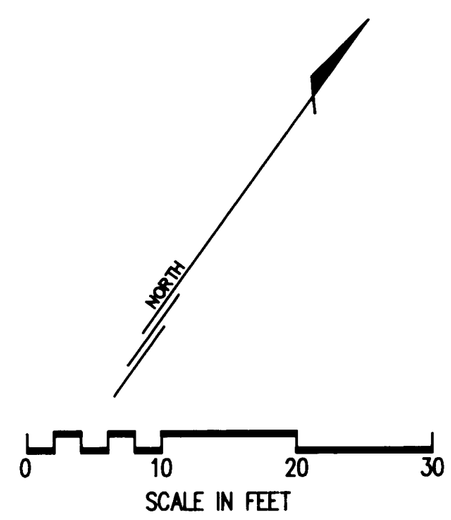

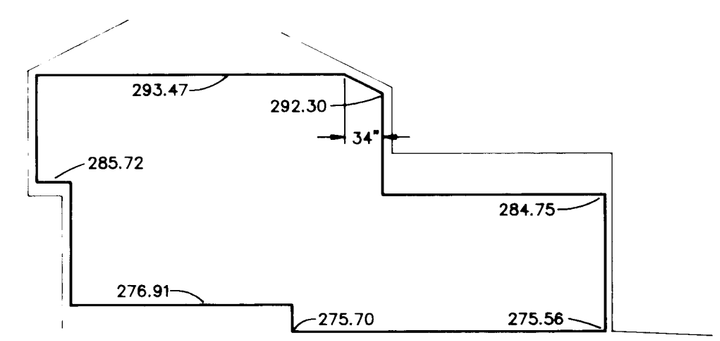

SECTION A–A

–TYPICAL EACH UNIT–

ELEVATIONS SHOWN ARE BASED ON CITY OF OAK HARBOR DATUM. (U.S.C. & G.S.) MEAN SEA LEVEL EQUALS 100.00 FT.

BUILDING PLANS OF BIRCH TREE CONDOMINIUM, PHASE I

SEC.3, T.32 N., R.1 E., W.M. OAK HARBOR, ISLAND COUNTY, WASHINGTON

SURVEYED BY:	DATE:	FLD. BK.:	
DRAWN BY: TT	DATE: 9/90	CKD. BY:	

FAKKEMA & KINGMA, INC.
CONSULTING ENGINEERS & SURVEYORS
4086 400th Ave. West Oak Harbor, Wa. 98277 675-5973

SCALE: AS NOTED PROJECT NO.: 3039
VOLUME OF SURVEYS, PAGE

SHEET 2 OF 3

FIG. 2 OF 3

9002 3203

3120786

CONDO.

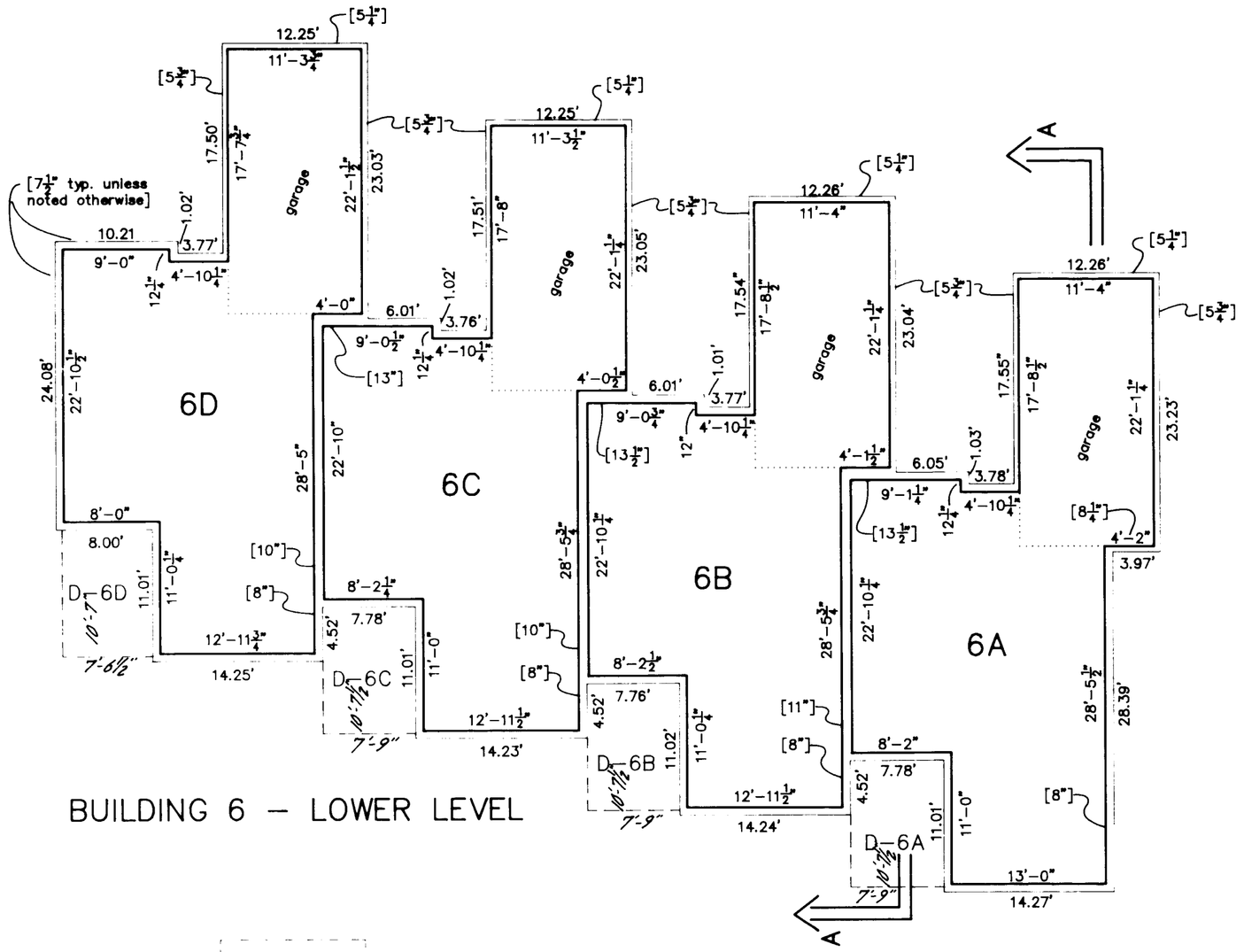

BUILDING 6 – LOWER LEVEL

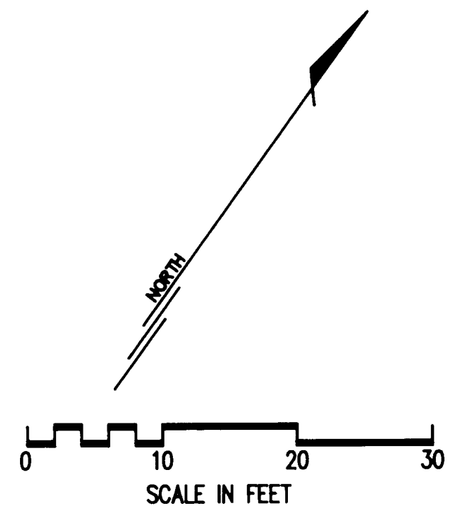

LAND SURVEYOR'S CERTIFICATE AND VERIFICATION

I, ROBERT D. CRAY, hereby certify that this survey map and plans for BIRCH TREE CONDOMINIUM, PHASE I are based upon an actual survey of the property herein described; that the bearings and distances are correctly shown; that all information required by RCW 64.34.232 is supplied herein; and that all horizontal and vertical boundaries of the units are substantially completed in accordance with said plans.

Robert D. Cray 12/5/90

Robert D. Cray
Registered Land Surveyor
Certificate No. 11941

ROBERT D. CRAY State of Washington 11941 Registered Professional Land Surveyor

STATE OF WASHINGTON } ss
COUNTY OF ISLAND }

Robert D. Cray, being an oath duly sworn, deposes and says that he is a Registered Land Surveyor, knows the contents of the Land Surveyor's Certification and survey map herein, and believes the same to be true.

Subscribed and sworn before me this 5TH day of DEC., 1990

Carmen K. Andre

NOTARY PUBLIC in and for the State of Washington residing at Oak Harbor.
My appointment expires 11/26/91

CARMEN K. ANDRE NOTARY PUBLIC COMMISSION EXPIRES NOV. 26, 1991 STATE OF WASHINGTON

NOTES:

The interior surfaces of the exterior walls and ceiling and the top of subfloor are the boundaries of each unit. The materials (wallboard, plasterboard, paneling, tiles, wallpaper, paint, finished flooring, etc.) constituting any part of the finished surfaces thereof are a part of the unit. Reference RCW 64.34.204

Windows and doors are not shown; the plane of the adjoining wall surface is continued.

Limited Common areas shown hereon are designated as follows:
D–XX Deck for use of Unit XX
P–XX Parking space for use of Unit XX

Wall thickness shown in brackets [ ].

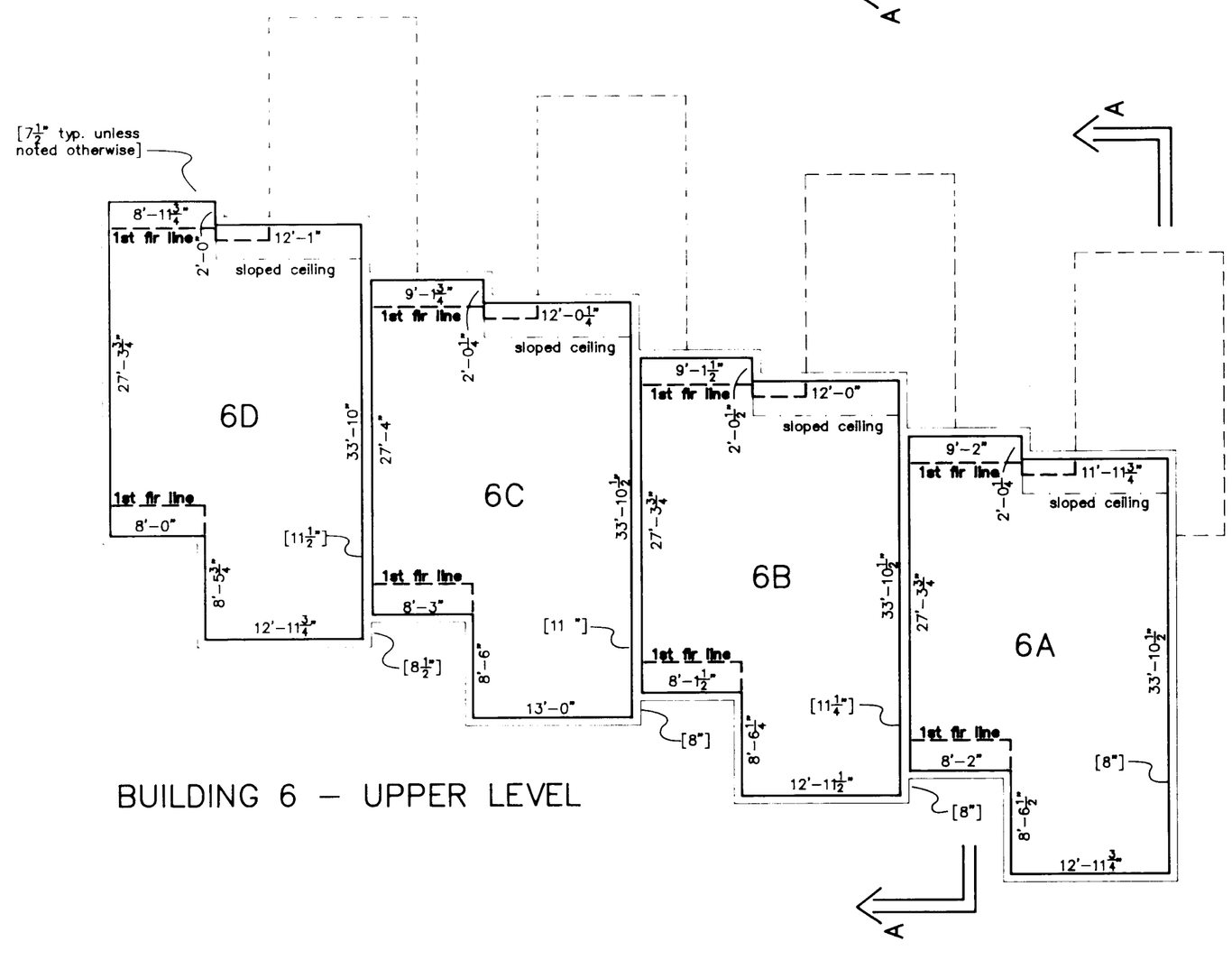

BUILDING 6 – UPPER LEVEL

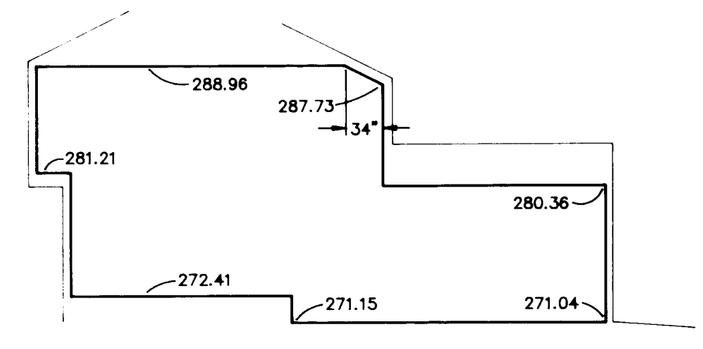

SECTION A–A

–TYPICAL EACH UNIT–

ELEVATIONS SHOWN ARE BASED ON CITY OF OAK HARBOR DATUM. (U.S.C. & G.S.) MEAN SEA LEVEL EQUALS 100.00 FT.

BUILDING PLANS OF BIRCH TREE CONDOMINIUM, PHASE I

SEC.3, T.32 N., R.1 E., W.M. OAK HARBOR, ISLAND COUNTY, WASHINGTON

SURVEYED BY:	DATE:	FLD. BK.:	
DRAWN BY: TT	DATE: 9/90	CKD. BY:	

FAKKEMA & KINGMA, INC.
CONSULTING ENGINEERS & SURVEYORS
4086 400th Ave. West Oak Harbor, Wa. 98277 675-5973

SCALE: AS NOTED | PROJECT NO.: 3039
VOLUME OF SURVEYS, PAGE

SHEET 3 OF 3

9002320 3 Pg 3 of 3