3150417

RIDGEHAVEN CONDO

162

9200890 8

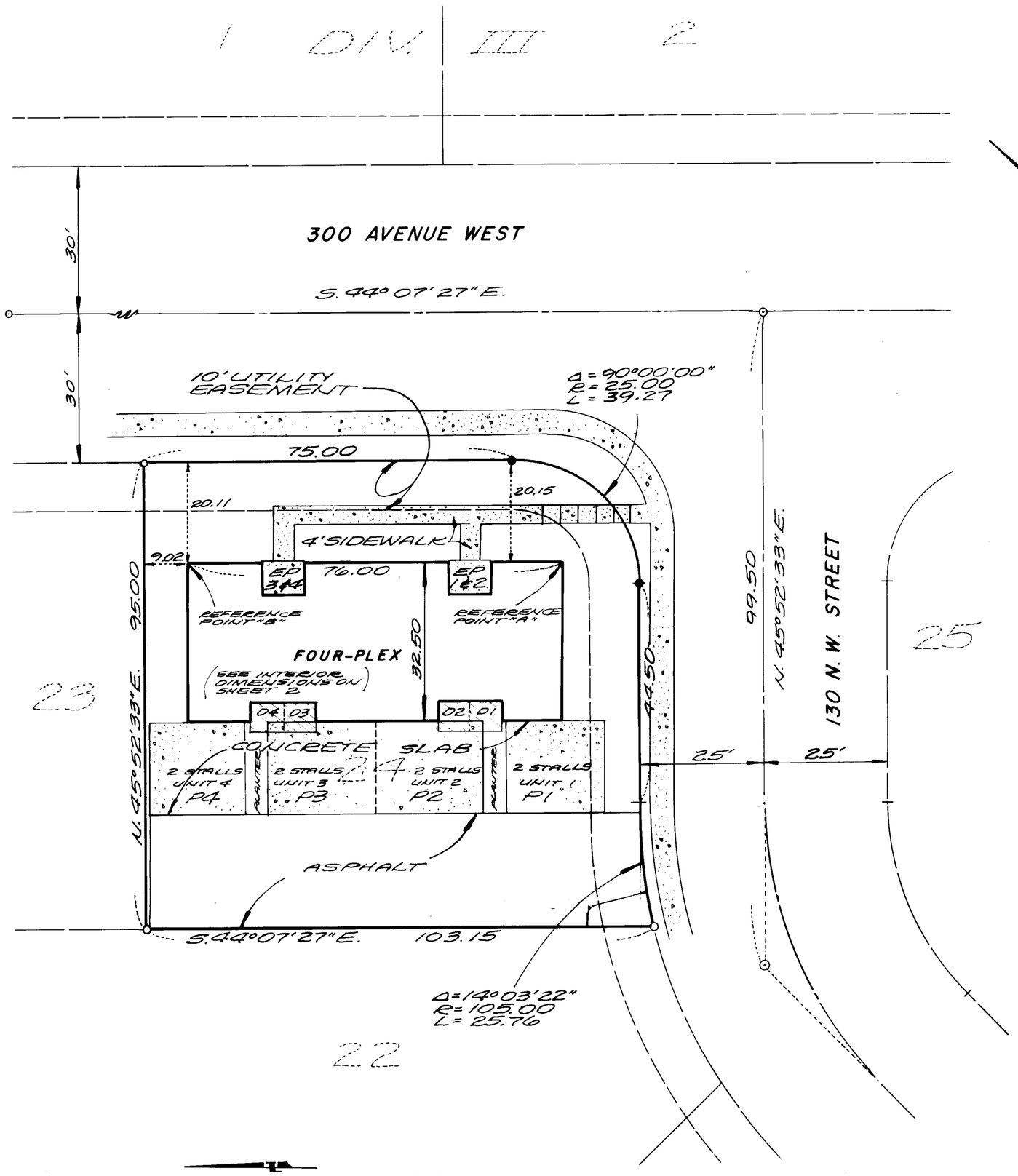

SCALE: 1" = 20'

0 5 10 20

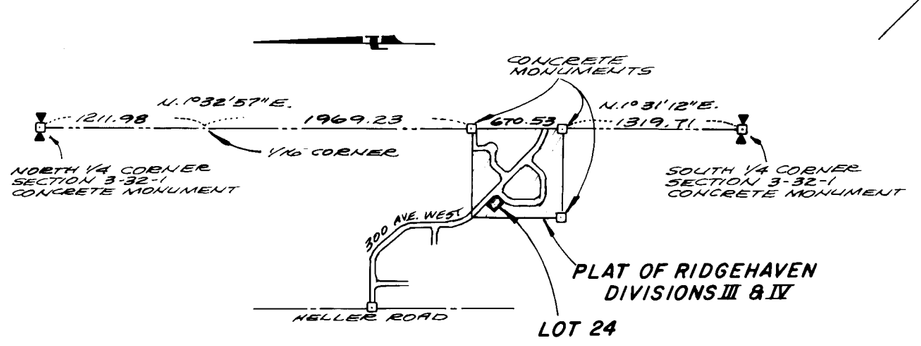

VICINITY MAP
NO SCALE

LEGEND:

- ⊙ — DENOTES EXISTING SURFACE MONUMENT
- ● — DENOTES IRON PIPE WITH CAP IMPRINTED "MZINLITH L.W. 21591" SET THIS SURVEY.
- ○ — DENOTES REBAR AND CAP IMPRINTED "LEONARD 8992".

NOTES

1. THIS SURVEY PERFORMED BY FIELD TRAVERSE USING A 3 SECOND ELECTRONIC DISTANCE MEASURING DEVICE.
2. BASIS OF BEARING: PLAT OF RIDGEHAVEN DIV. III & IV AS RECORDED IN VOL. 13 OF PLATS AT PAGE 53 UNDER AUDITOR'S FILE No. 87001342, RECORDS OF ISLAND COUNTY, WASHINGTON.
3. ELEVATIONS SHOWN ARE BASED ON CITY OF OAK HARBOR DATUM; U.S.C. & G.S. MEAN SEA LEVEL = 100.00 FEET, CITY OF OAK HARBOR.
4. LIMITED COMMON AREAS SHOWN HEREON ARE DESIGNATED AS FOLLOWS:
   - D-X = DECK FOR USE OF UNIT X
   - P-X = PARKING SPACE FOR USE OF UNIT X
   - EPX = ENTRY PORCH FOR USE OF UNIT X
5. LOT SIZE = 9393 sq. ft.
   BUILDING AREA = 2251 sq. ft.
   PARKING, WALKWAY AREA = 4318 sq. ft.
   PERCENT LANDSCAPING = 30%
   SHARE OF OWNERSHIP OF COMMON ELEMENTS IN FRACTION OF TOTAL:

UNIT	SHARE
1	1/4
2	1/4
3	1/4
4	1/4

SURVEYOR'S CERTIFICATE

THIS MAP CORRECTLY REPRESENTS A SURVEY MADE BY ME OR UNDER MY DIRECTION IN CONFORMANCE WITH THE REQUIREMENTS OF THE SURVEY RECORDING ACT AT THE REQUEST OF WILLIAM L. AND FLAYCE McDOWELL IN NOVEMBER 1991.

Stuart B. Van Buren
STUART B. VAN BUREN, P.L.S.
CERTIFICATE No. 21591
DATE 4/6/92

STUART B. VAN BUREN JR. STATE OF WASHINGTON 21591 REGISTERED PROFESSIONAL LAND SURVEYOR EXPIRES 12/12/92

TREASURER'S CERTIFICATE

I HEREBY CERTIFY THAT THERE ARE NO DELINQUENT SPECIAL ASSESSMENTS AND ALL SPECIAL ASSESSMENTS ON ANY OF THE PROPERTY HEREIN CONTAINED DEDICATED AS STREETS, ALLEYS OR FOR OTHER PUBLIC USE ARE PAID IN FULL.
THIS 2nd DAY OF April, 1992.

Perry G. Nichols
CITY FINANCE DIRECTOR

ALL TAXES LEVIED WHICH HAVE BECOME A LIEN UPON THE LANDS HEREIN DESCRIBED HAVE BEEN FULLY PAID AND DISCHARGED ACCORDING TO THE RECORDS OF MY OFFICE INCLUDING TAXES FOR THE CURRENT YEAR, 1992.

Alice M. Nielsen, DEPUTY
COUNTY TREASURER

APPROVAL

APPROVED BY ME THIS 2ND DAY OF April 1992.

William J. Koepke
WILLIAM J. KOEPKE
OAK HARBOR BUILDING OFFICIAL

AUDITOR'S CERTIFICATE

FILED FOR RECORD THIS 15th DAY OF May 1992, AT 3:27 P.M. IN CONDOMINIUM PLANS, PAGE ____ AT THE REQUEST OF McDOWELL AND ASSOCIATES UNDER AUDITOR'S FILE No. 92008908

Ark Hyland, Auditor
by Glenny Simmons, Deputy
COUNTY AUDITOR

ISLAND COUNTY COUNTY AUDITOR STATE OF WASHINGTON

DECLARATION

RECORDED MAY 15 1992, IN VOLUME 527, PAGES ____, UNDER AUDITOR'S FILE No. 92008907 RECORDS OF ISLAND COUNTY, WASHINGTON.

DECLARANTS DEDICATION AND CERTIFICATE OF COMPLETION

RECORDED MAY 15 1992 UNDER AUDITOR'S FILE No. 92008909 RECORDS OF ISLAND COUNTY, WASHINGTON.

LEGAL DESCRIPTION

LOT 24 PLAT OF RIDGEHAVEN DIVISIONS III AND IV AS RECORDED IN VOLUME 13 OF PLATS AT PAGE 53 UNDER AUDITOR'S FILE No. 87001342, RECORDS OF ISLAND COUNTY, WASHINGTON.

PARCEL NUMBER S8012-0400024-0

MAP OF THE RIDGEHAVEN CONDOMINIUMS
PLAT OF RIDGEHAVEN DIVISIONS III & IV

SECTION 3, TWP. 32 N., RGE. 1 E., OAK HARBOR, ISLAND COUNTY, WA.

DATE: NOVEMBER 1991	McDOWELL AND ASSOCIATES 8080 HIGHWAY 20 OAK HARBOR, WASHINGTON 679-3537	SCALE: 1" = 20'
JOB No.: 91108		SHEET 1 OF 2

3150417

RIDGEHAVEN CONDO

262

9200808

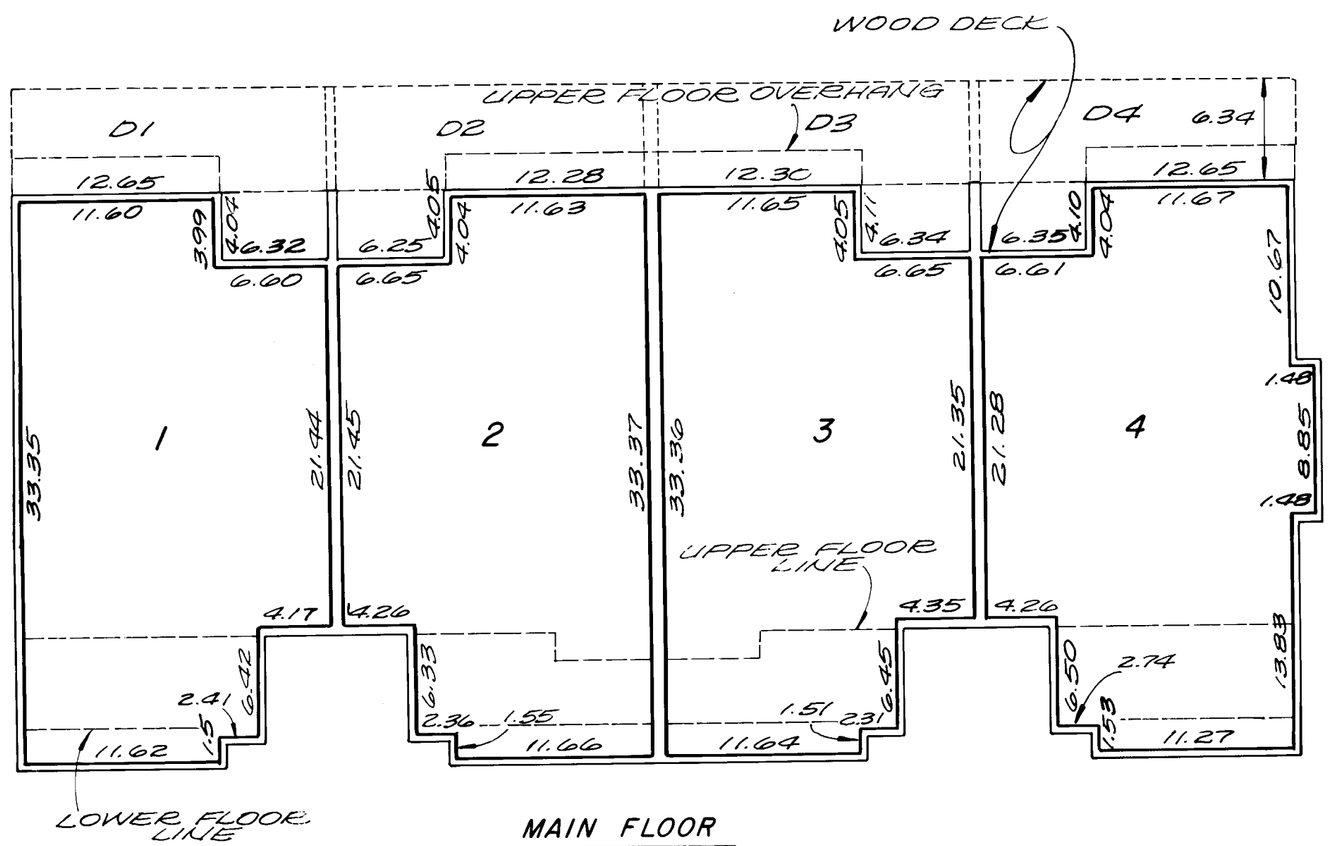

MAIN FLOOR

CEILING EL.= 292.99

FLOOR EL.= 284.94

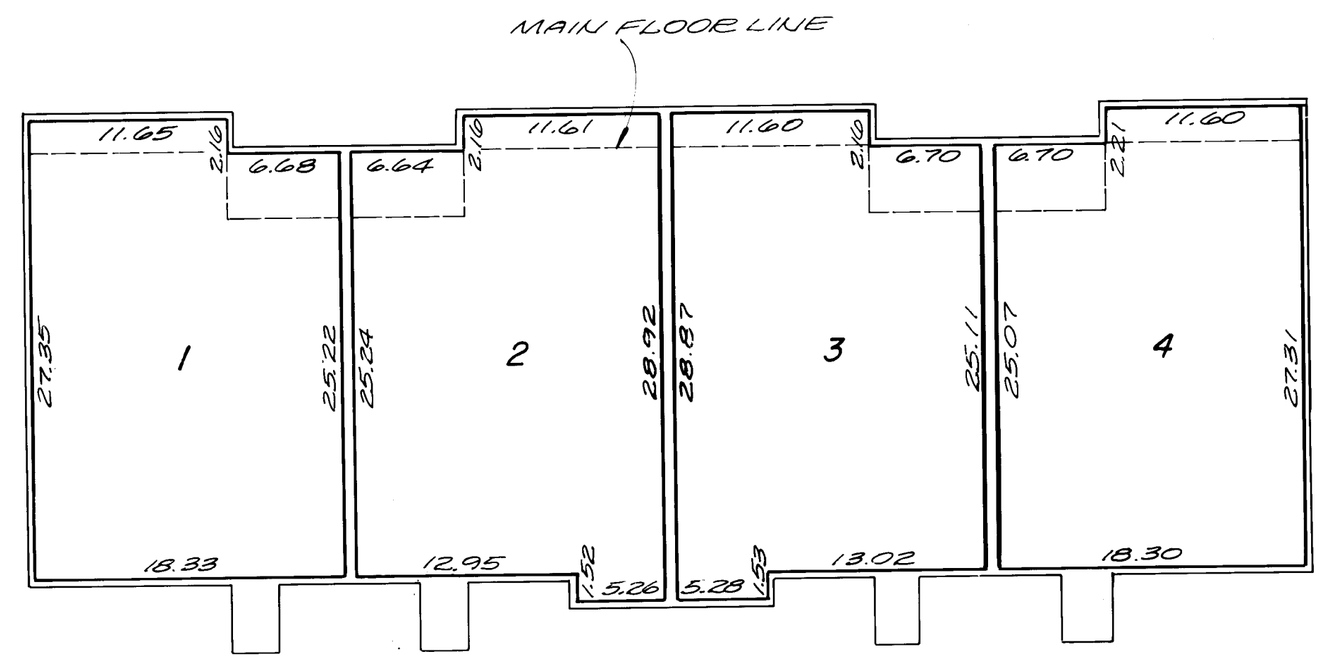

UPPER FLOOR

CEILING EL.= 301.90

FLOOR EL.= 293.93

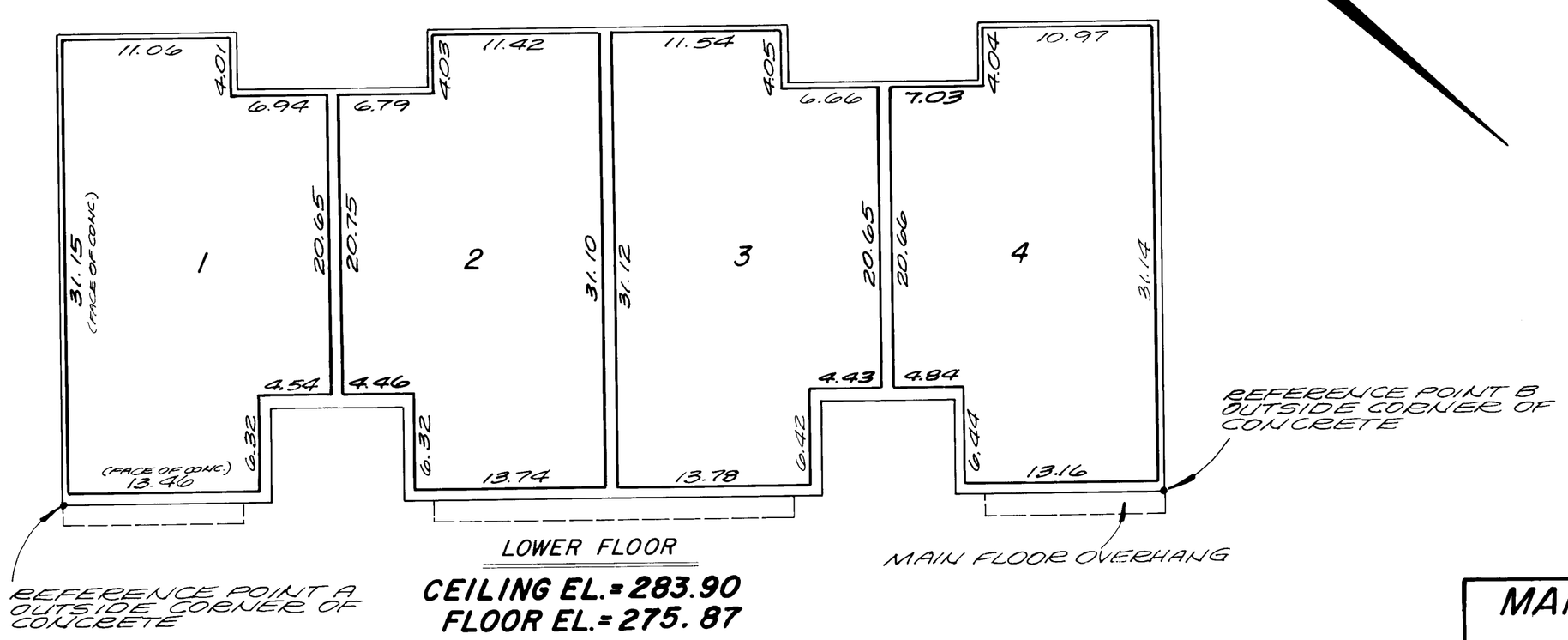

LOWER FLOOR

CEILING EL.= 283.90

FLOOR EL.= 275.87

MAP OF THE RIDGEHAVEN CONDOMINIUMS
PLAT OF RIDGEHAVEN DIVISIONS III & IV

SECTION 3, TWP. 32 N, RGE. 1 E., OAK HARBOR, ISLAND COUNTY, WA.

DATE: NOVEMBER 1991	McDOWELL AND ASSOCIATES 8080 HIGHWAY 20 OAK HARBOR, WASHINGTON • 679-3537	SCALE: 1" = 8'
JOB No.: 91108		SHEET: 2 OF 2