3999170 -01

SEA CLIFF 1 of 3

SEA CLIFF

A CONDOMINIUM

SECTION 6, TOWNSHIP 32 NORTH, RANGE 1 EAST, W.M.

DEDICATION

KNOW ALL MEN BY THESE PRESENTS THAT WE THE UNDERSIGNED OWNERS IN FEE SIMPLE, AND OR MORTGAGEE, DO HEREBY SUBMIT THE PROPERTY TO THE HORIZONTAL PROPERTY REGIMES ACT LAWS OF THE STATE OF WASHINGTON, 1963 CHAPTER 156 AS AMENDED LAWS OF FIRST EXTRA ORDINARY SESSION, 1965 CHAPTER 11 CODIFIED IN CHAPTER 64.32 R.C.W. AND DEDICATE THE SAME FOR CONDOMINIUM PURPOSES. THIS IS NOT A DEDICATION FOR PUBLIC PURPOSES, OR TO THE PUBLIC, BUT IS MADE ONLY FOR THE PURPOSES OF THE HORIZONTAL PROPERTY REGIMES ACT AND THIS CONDOMINIUM.

IN WITNESS WHEREOF WE HAVE HEREUNTO SET OUR HANDS AND SEALS THIS 24th DAY OF OCTOBER 1979, A.D.

Richard G. Matthews — Ona Mae Matthews — Wayne Chapman, WAYNE CHAPMAN

Don L. McKee, DON L. MCKEE — Billie V. McKee, BILLIE V. MCKEE — Anna Mae Chapman, ANNA MAE CHAPMAN

ACKNOWLEDGEMENTS

STATE OF WASHINGTON } S.S
COUNTY OF ISLAND }

ON THIS 24th DAY OF OCTOBER 1979 PERSONALLY APPEARED RICHARD G. MATTHEWS AND ONA MAE MATTHEWS TO ME KNOWN TO BE THE INDIVIDUALS DESCRIBED IN AND WHO EXECUTED THE WITHIN AND FOREGOING INSTRUMENT AND ACKNOWLEDGED TO ME THAT THEY SIGNED THE SAME AS THEIR FREE AND VOLUNTARY ACT AND DEED FOR THE USES AND PURPOSES THEREIN MENTIONED.

NOTARY PUBLIC IN AND FOR THE STATE OF WASHINGTON — John D. Chapman
RESIDING AT OAK HARBOR, WASHINGTON

STATE OF WASHINGTON } S.S
COUNTY OF ISLAND }

ON THIS 24TH DAY OF OCTOBER 1979 PERSONALLY APPEARED DON L. MCKEE AND BILLIE V. MCKEE TO ME KNOWN TO BE THE INDIVIDUALS DESCRIBED IN AND WHO EXECUTED THE WITHIN AND FOREGOING INSTRUMENT AND ACKNOWLEDGED TO ME THAT THEY SIGNED THE SAME AS THEIR FREE AND VOLUNTARY ACT AND DEED FOR THE USES AND PURPOSES THEREIN MENTIONED.

NOTARY PUBLIC IN AND FOR THE STATE OF WASHINGTON — John D. Chapman
RESIDING AT OAK HARBOR, WASHINGTON

STATE OF WASHINGTON } SS
COUNTY OF ISLAND }

THIS IS TO CERTIFY THAT ON THIS 24TH DAY OF OCTOBER 1979 BEFORE ME, THE UNDERSIGNED, A NOTARY PUBLIC IN AND FOR THE STATE OF WASHINGTON, DULY COMMISSIONED AND SWORN PERSONALLY APPEARED WAYNE CHAPMAN AND ANNA MAE CHAPMAN KNOWN TO ME TO BE THE PRESIDENT AND SECRETARY RESPECTIVELY OF WAYNE CHAPMAN INC., A WASHINGTON CORPORATION, THAT THEY EXECUTED THE FOREGOING INSTRUMENT AND ACKNOWLEDGED THE SAID INSTRUMENT TO BE THE FREE AND VOLUNTARY ACT AND DEED OF SAID CORPORATION, FOR THE USES AND PURPOSES THEREIN MENTIONED, AND ON OATH STATED THAT THEY ARE AUTHORIZED TO EXECUTE SAID INSTRUMENT AND THAT THE SEAL AFFIXED IS THE CORPORATE SEAL OF SAID CORPORATION.

IN WITNESS WHEREOF, HAVE HEREUNTO SET MY HAND AND SEAL THE DAY AND YEAR FIRST ABOVE WRITTEN.

NOTARY PUBLIC IN AND FOR THE STATE OF WASHINGTON — John D. Chapman
RESIDING AT OAK HARBOR, WASHINGTON

LEGAL DESCRIPTION

THE NORTH 260 FEET OF GOVERNMENT LOT 2, AS MEASURED ALONG THE EAST LINE THEREOF IN SECTION 6, TOWNSHIP 32 NORTH, RANGE 1 EAST W.M., EXCEPT THAT PORTION LYING EAST OF THE WEST MARGIN OF WEST BEACH ROAD.

SITUATE IN THE COUNTY OF ISLAND, STATE OF WASHINGTON.

SUBJECT TO RESERVATIONS CONTAINED IN PATENT FROM THE UNITED STATES OF AMERICA RECORDED SEPTEMBER 21, 1964 AS AUDITOR'S NO. 9317 13.

UTILITY EASEMENT- (EASEMENT FOR UNDERGROUND ELECTRIC SYSTEM-) (PUGET POWER)

A RIGHT OF WAY TEN (10) FEET IN WIDTH HAVING FIVE (5) FEET OF SUCH WIDTH ON EACH SIDE OF A CENTER LINE DESCRIBED AS FOLLOWS:

BEING LOCATED AS CONSTRUCTED ON THE ABOVE DESCRIBED PROPERTY, MORE PARTICULARLY DESCRIBED AS FOLLOWS:

BEGINNING AT A POINT ON THE EAST LINE OF SAID PROPERTY THAT IS APPROXIMATELY 105 FEET SOUTH OF THE NORTHEAST CORNER THEREOF; THENCE APPROXIMATELY 125 FEET TO ITS TERMINUS.

FILED AS A F # 346761, RECORDS OF ISLAND COUNTY, WASHINGTON.

THE EQUAL PERCENTAGE OWNERSHIP OF THE COMMON ELEMENTS FOR EACH APARTMENT IS AS FOLLOWS:

UNIT A =	2678	SQ. FT.	17.18 %
UNIT B =	2486	SQ. FT.	15.94 %
UNIT C =	2586	SQ. FT.	16.59 %
UNIT D =	2598	SQ. FT.	16.66 %
UNIT E =	2618	SQ. FT.	16.79 %
UNIT F =	2666	SQ. FT.	16.84 %
TOTALS	15,592	SQ. FT.	100.00 %

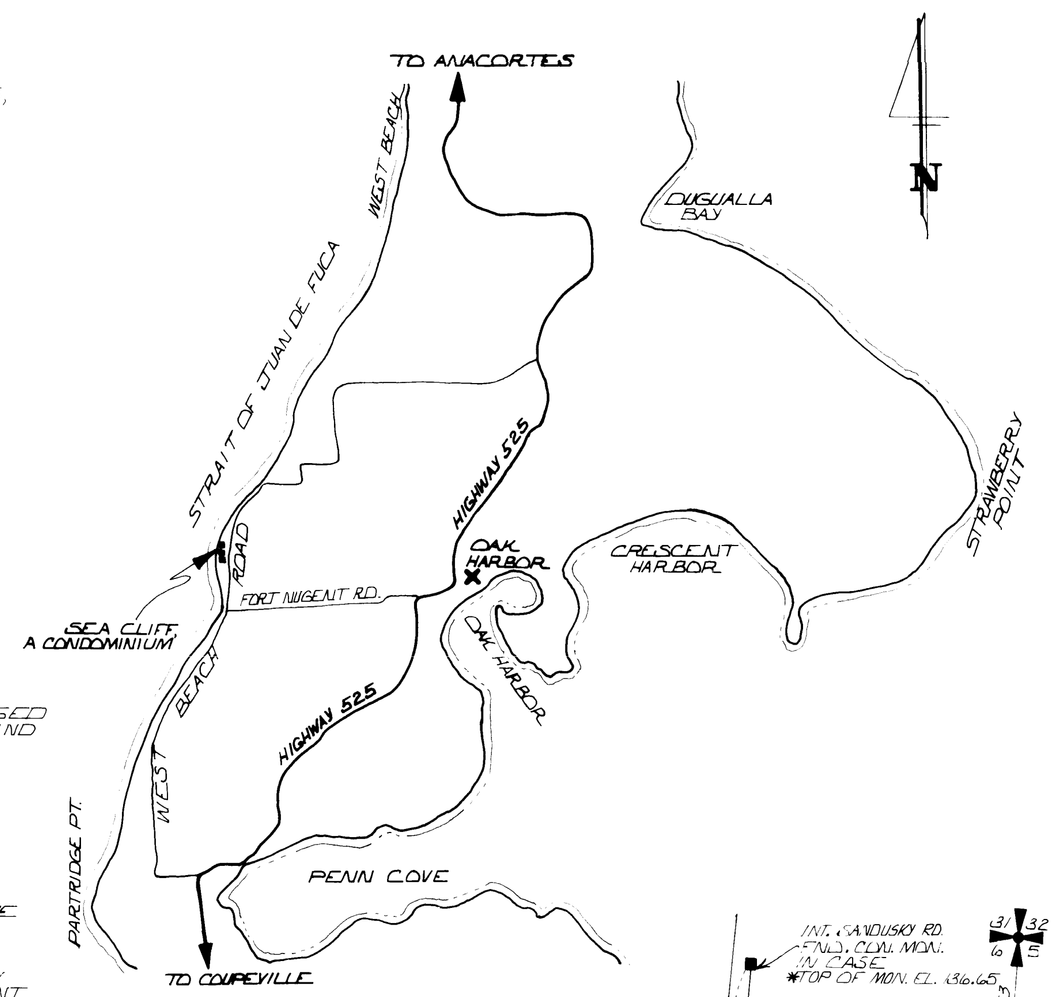

VICINITY MAP
NO SCALE

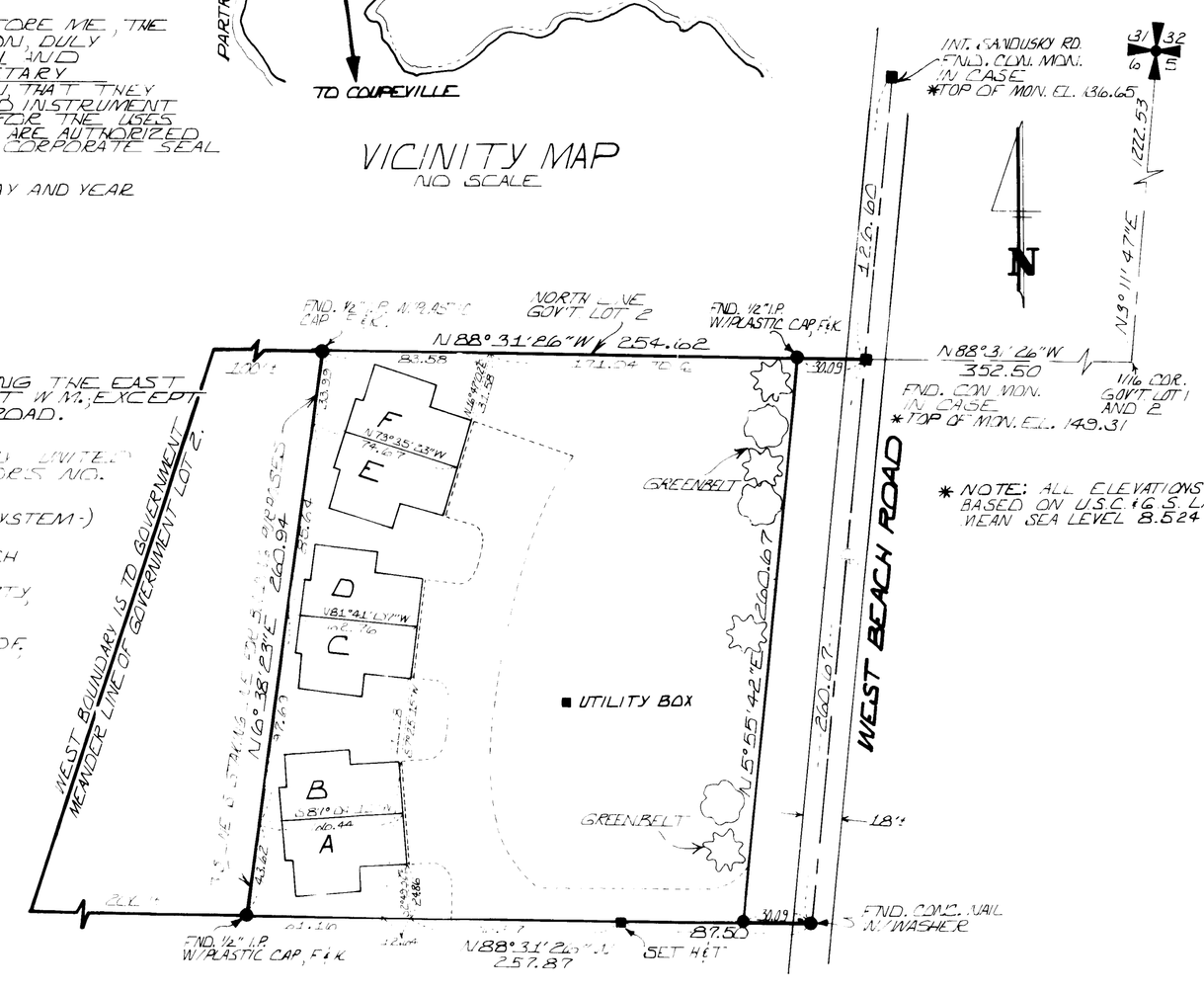

SUBDIVISION
SCALE 1" = 50'

LAND SURVEYOR'S CERTIFICATE

I, LOUIS H. REGUA, HEREBY CERTIFY THAT THE FOLLOWING PLAT OF SEA CLIFF, A CONDOMINIUM, IS BASED UPON AN ACTUAL SURVEY, THAT THE COURSES AND DISTANCES ARE SHOWN THEREON CORRECTLY, THAT THE MONUMENTS HAVE BEEN SET AND THAT THE PLAN IS IN AGREEMENT WITH THE AS BUILT PLANS.

Louis H. Regua — 4-27-79
LOUIS H. REGUA — DATE
CERTIFICATE NO. 16224

TREASURER'S CERTIFICATE

I, Patricia C. Pfeifer, TREASURER OF ISLAND COUNTY, WASHINGTON, HEREBY CERTIFY THAT ALL TAXES ON THE FOLLOWING PROPERTY HAVE BEEN FULLY PAID TO AND INCLUDING THE YEAR 1980.

COUNTY TREASURER — Bernice E. Bainbridge, DEPUTY COUNTY TREASURER

RECORDING CERTIFICATE # 363159

FILED FOR RECORD AT THE REQUEST OF Land Title Co. ON THE 17th DAY OF December 1979, AT 40 MINUTES PAST 4 P.M., AND RECORDED IN VOLUME 12 OF PLATS, PAGES 78, 79 AND 80. RECORDS OF ISLAND COUNTY, WASHINGTON.

COUNTY AUDITOR — DEPUTY COUNTY AUDITOR

CERTIFICATE OF TITLE

RECORDED ON THE 17th DAY OF December 1979, FILE NO. 363159, VOLUME 467, PAGE 492, RECORDS OF ISLAND COUNTY, WASHINGTON.

DECLARATION

RECORDED December 17 1979 IN VOLUME 469 PAGE 624 UNDER AUDITOR'S FILE NO. 363159, RECORDS OF ISLAND COUNTY, WASHINGTON.

APPROVALS

EXAMINED AND APPROVED IN ACCORDANCE WITH THE STATUTES ORDINANCES OF ISLAND COUNTY. THIS 10TH DAY OF DECEMBER 1979.

COUNTY ENGINEER

APPROVED AS TO CONFORMITY WITH THE TERMS AND CONDITIONS OF APPROVAL AND APPLICABLE STATE AND COUNTY LAWS AND REGULATIONS. THIS 10TH DAY OF DECEMBER 1979.

ISLAND COUNTY PLANNING DIRECTOR

APPROVED BY THE BOARD OF COUNTY COMMISSIONERS THIS 10TH DAY OF DEC 1979.

CHAIRMAN — DATE
DATE
DATE

ATTEST: COUNTY AUDITOR & EX-OFFICIO CLERK OF BOARD

* NOTE: ALL ELEVATIONS SHOWN ARE BASED ON U.S.C.&G.S. CAPE #2 DATUM, MEAN SEA LEVEL 8.524 FEET.

DEVELOPER:
WAYNE CHAPMAN, INC.
6373 - 60TH N.W.
OAK HARBOR, WA. 98277
PHONE 675-5953

PREPARED BY:
GOSSMAN & ASSOC.
330 METCALF
SEDRO WOOLLEY WA
PHONE: 855-1810

11-3-79	ADDED COUNTY ENGR'S REQUIREMENTS	KMC
10-8-79	ADDED PLANNING DEPT. REQUIREMENTS	KMC
9-6-79	ADDED PLANNING DEPT. REQUIREMENTS	KMC
[illegible]	[illegible]	KMC

SEA CLIFF
A CONDOMINIUM

SEA CLIFF 2 of 3

SEA CLIFF

A CONDOMINIUM

0 4 8
SCALE 1/8" = 1'

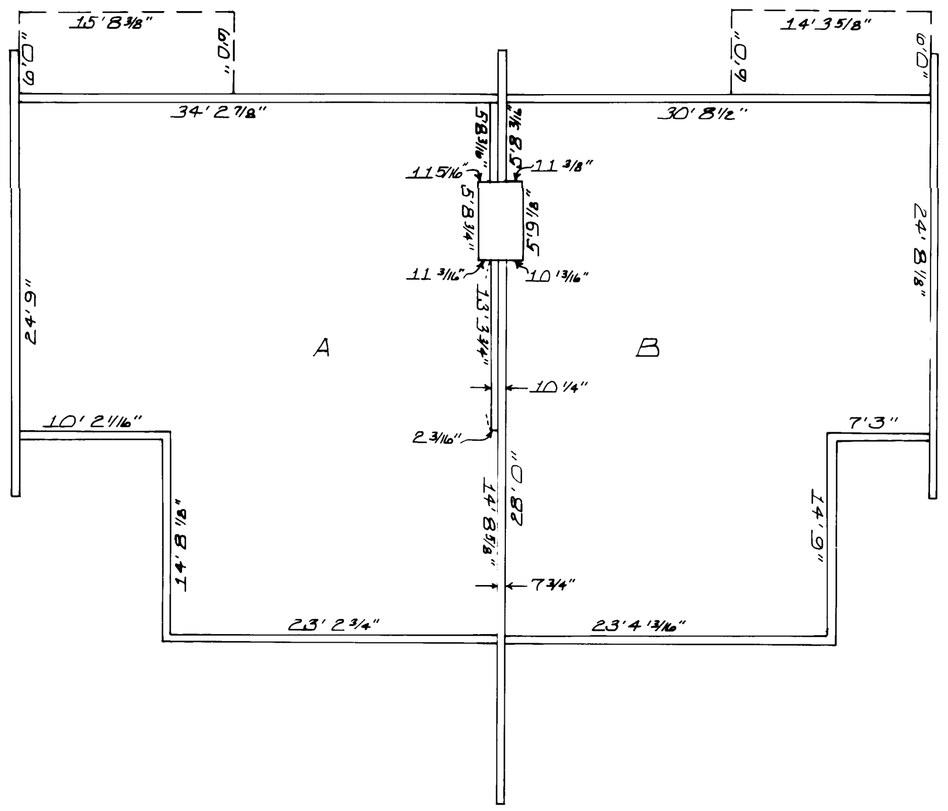

SECOND FLOOR

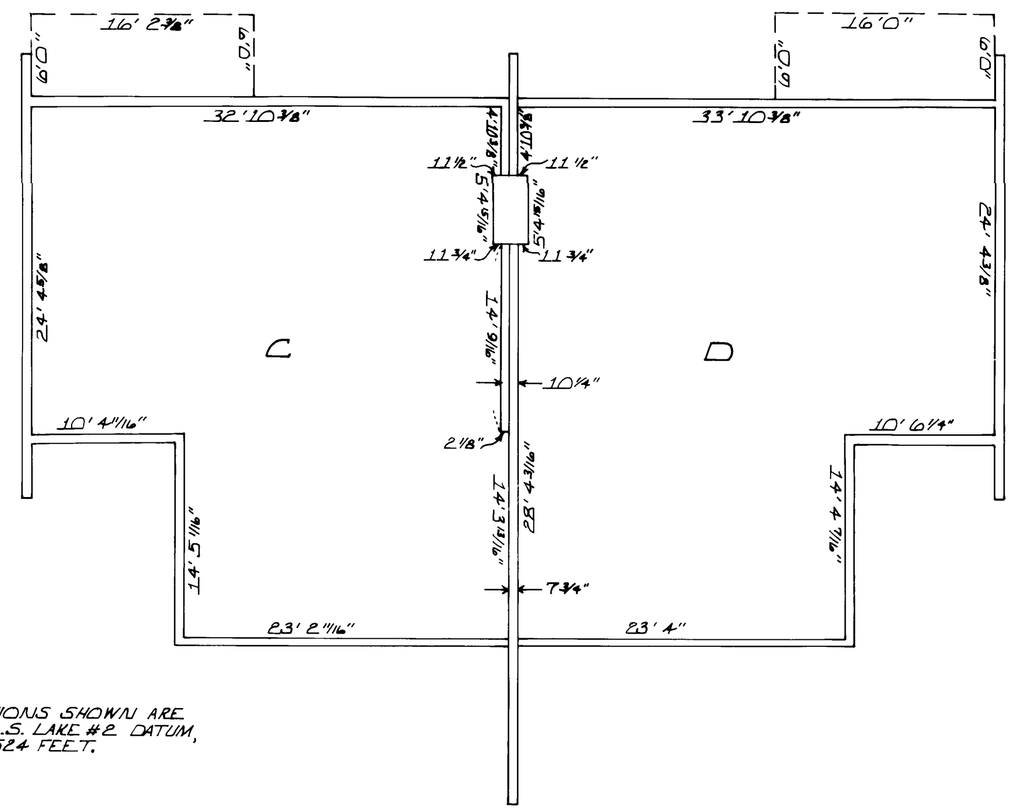

SECOND FLOOR

ELEVATIONS EACH UNIT

PT. DESCRIPTION	UNIT A	UNIT B	UNIT C	UNIT D
A GARAGE	183.42	181.38	179.80	176.77
B	191.22	189.06	187.49	184.43
C	192.56	190.55	189.08	186.07
D	195.73	193.86	192.13	189.10
E	200.56	198.57	197.39	194.40
F	210.97	208.98	207.54	204.59
G	205.11	203.12	201.67	198.62
H 2ND	197.10	195.10	193.55	190.56
I	195.97	193.94	192.50	189.50
J 1ST	187.97	185.94	184.44	181.44
K	191.66	189.60	188.32	185.19

NOTE: ALL ELEVATIONS SHOWN ARE BASED ON U.S.C.&G.S. LAKE #2 DATUM, MEAN SEA LEVEL 8.524 FEET.

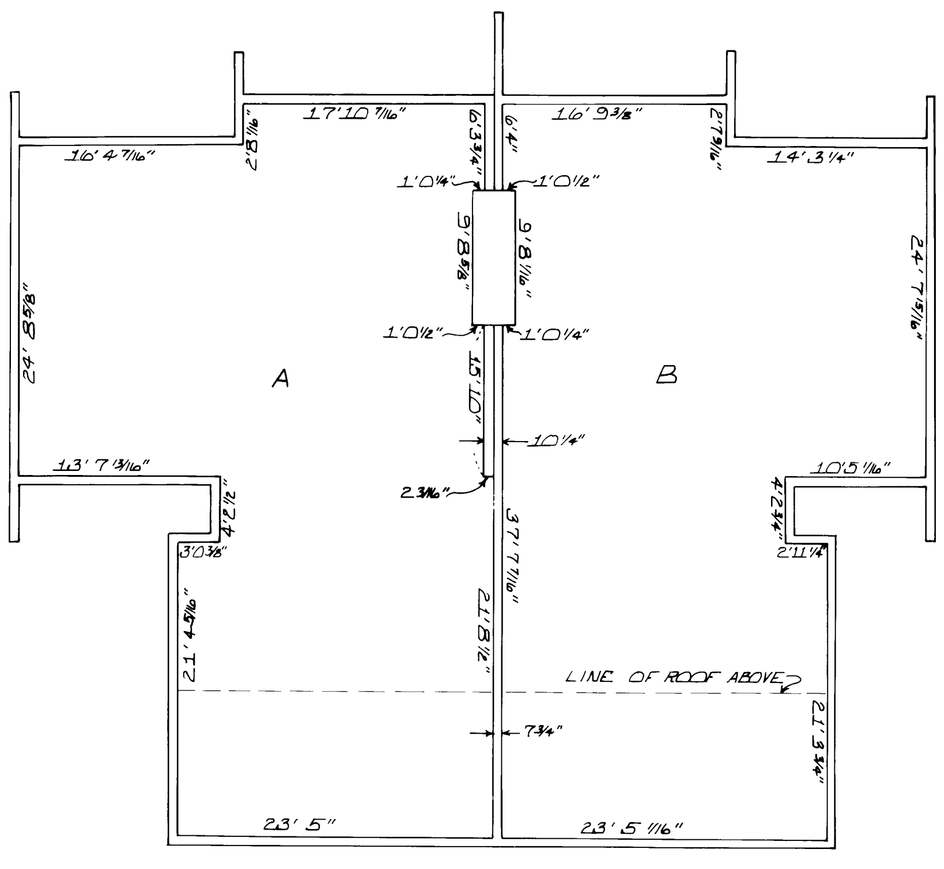

FIRST FLOOR

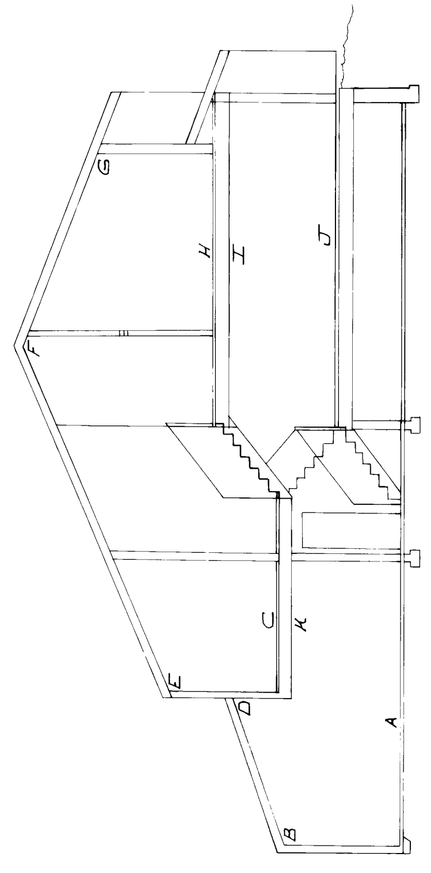

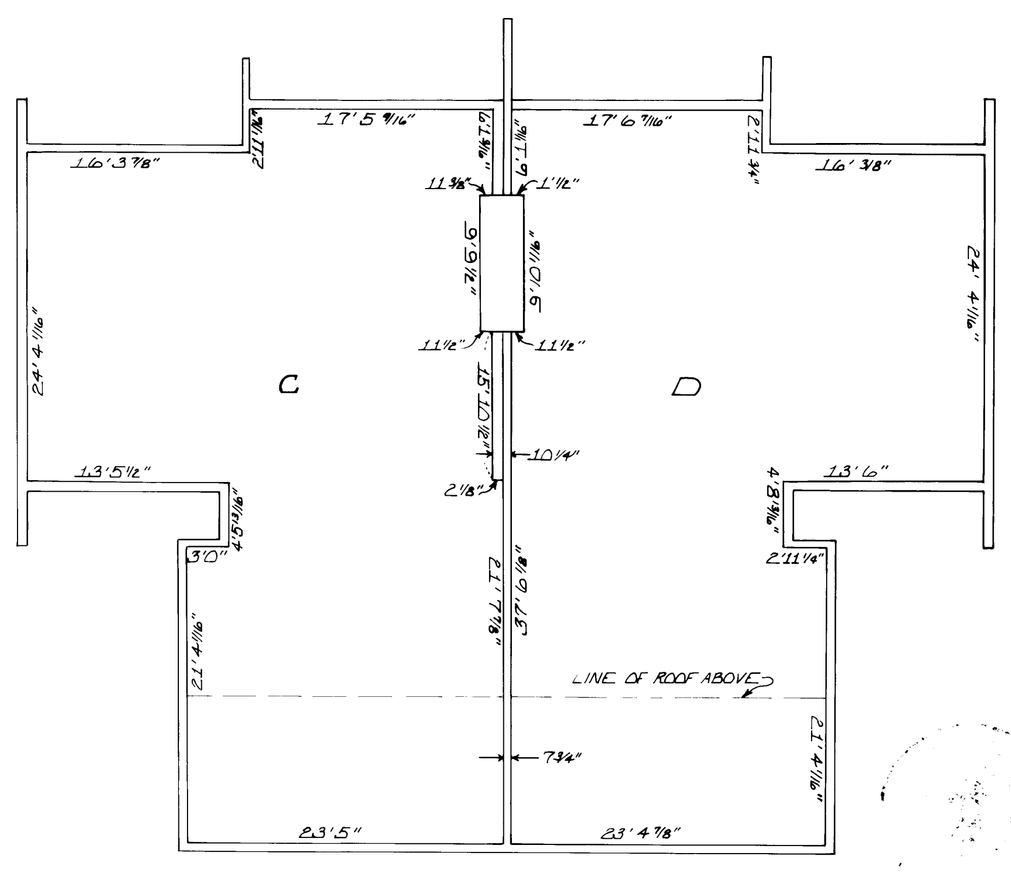

FIRST FLOOR

NOTE: THE THICKNESS OF ALL EXTERIOR WALLS IS 5".
1/8" = 1 FOOT

PREPARED BY:
CROSSMAN & ASSOC.
330 METCALF
SEDRO WOOLLEY, WA.
PHONE: 855-7810

KMC

SEA CLIFF
A CONDOMINIUM

SEA CLIFF
A CONDOMINIUM

0 4 8
SCALE 1/8" = 1'

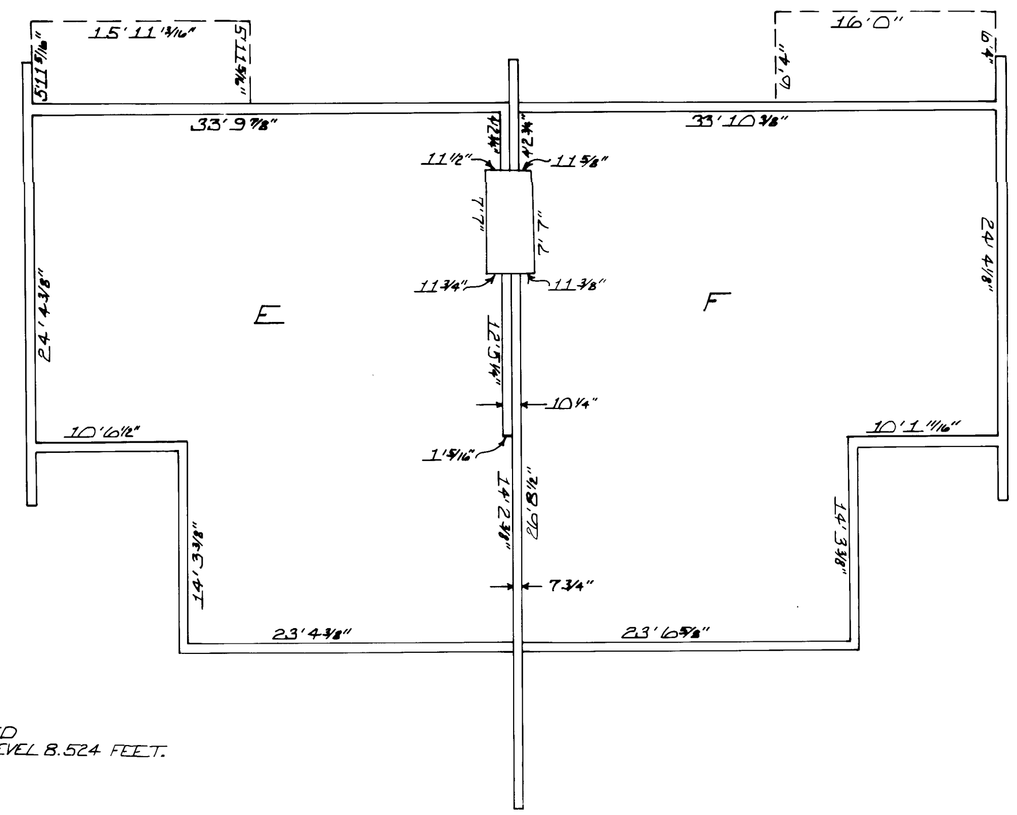

SECOND FLOOR

ELEVATIONS EACH UNIT

PT. DESCRIPTION	UNIT E	UNIT F
A GARAGE	173.45	170.93
B	181.26	178.78
C	182.65	180.12
D	186.88	183.43
E	191.12	188.60
F	201.29	198.73
G	195.29	192.75
H 2nd	187.23	184.69
I	186.19	183.60
J	178.14	175.57
K	181.77	179.29

NOTE: ALL ELEVATIONS SHOWN ARE BASED ON U.S.C. & G.S. LAKE #2 DATUM, MEAN SEA LEVEL 8.524 FEET.

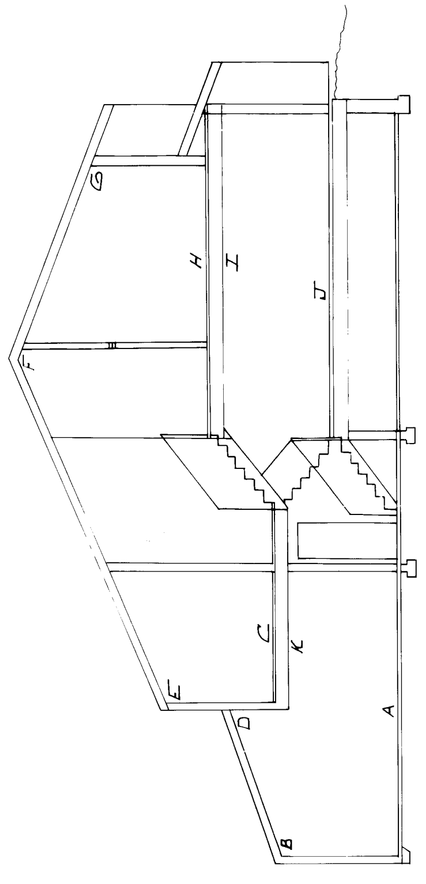

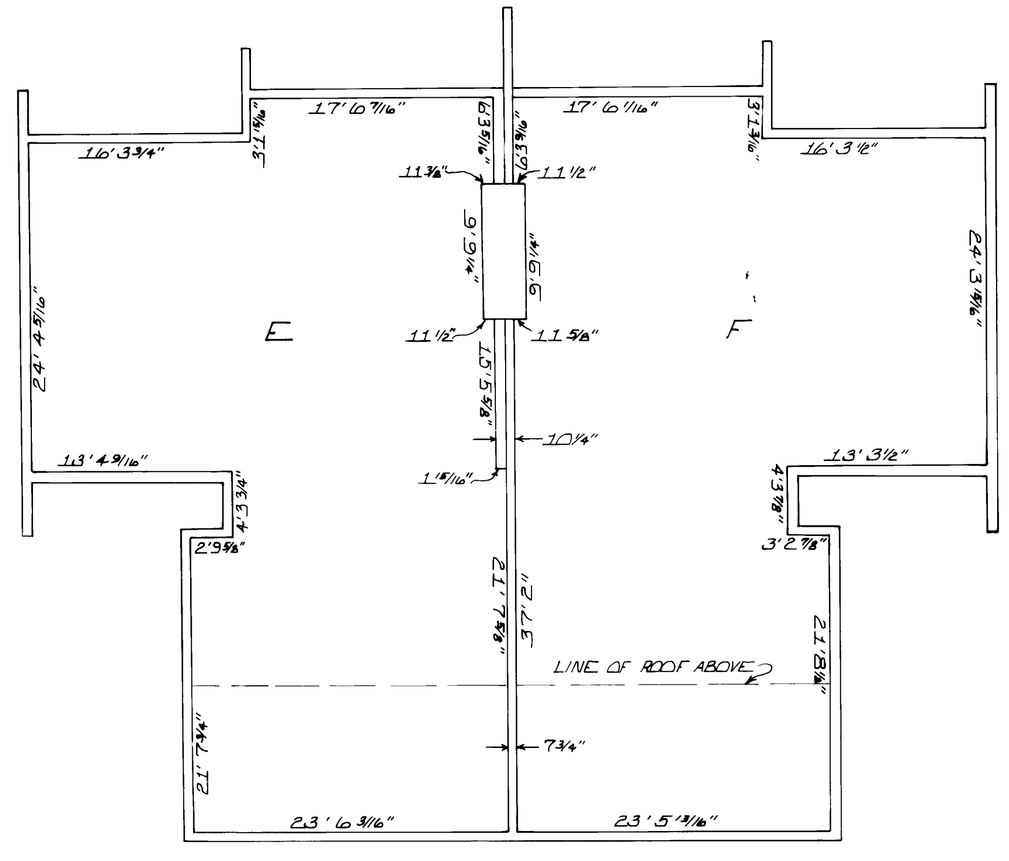

FIRST FLOOR

NOTE: THE THICKNESS OF ALL EXTERIOR WALLS IS 5".
1/8" = 1 FOOT

PREPARED BY:
CROSSMAN & ASSOC.
330 METCALF
SEDRO WOOLLEY WA.
PHONE 855-1810

SEA CLIFF
A CONDOMINIUM

KMC