TWO TOTEMS CONDOMINIUMS

07/16/2008 01:45:15 PM 4232958
Recording Fee $133.00 Page 1 of 6
Condo Plan
Island County Washington

LEGEND

- REBAR W/ YELLOW PLASTIC CAP (TMI LS 28414) SET THIS SURVEY.
- REBAR OR IRON PIPE
- MONUMENT IN CASE
- SET NAIL & SHINER (LS 28414)
- WATER METER
- TELEPHONE PEDESTAL

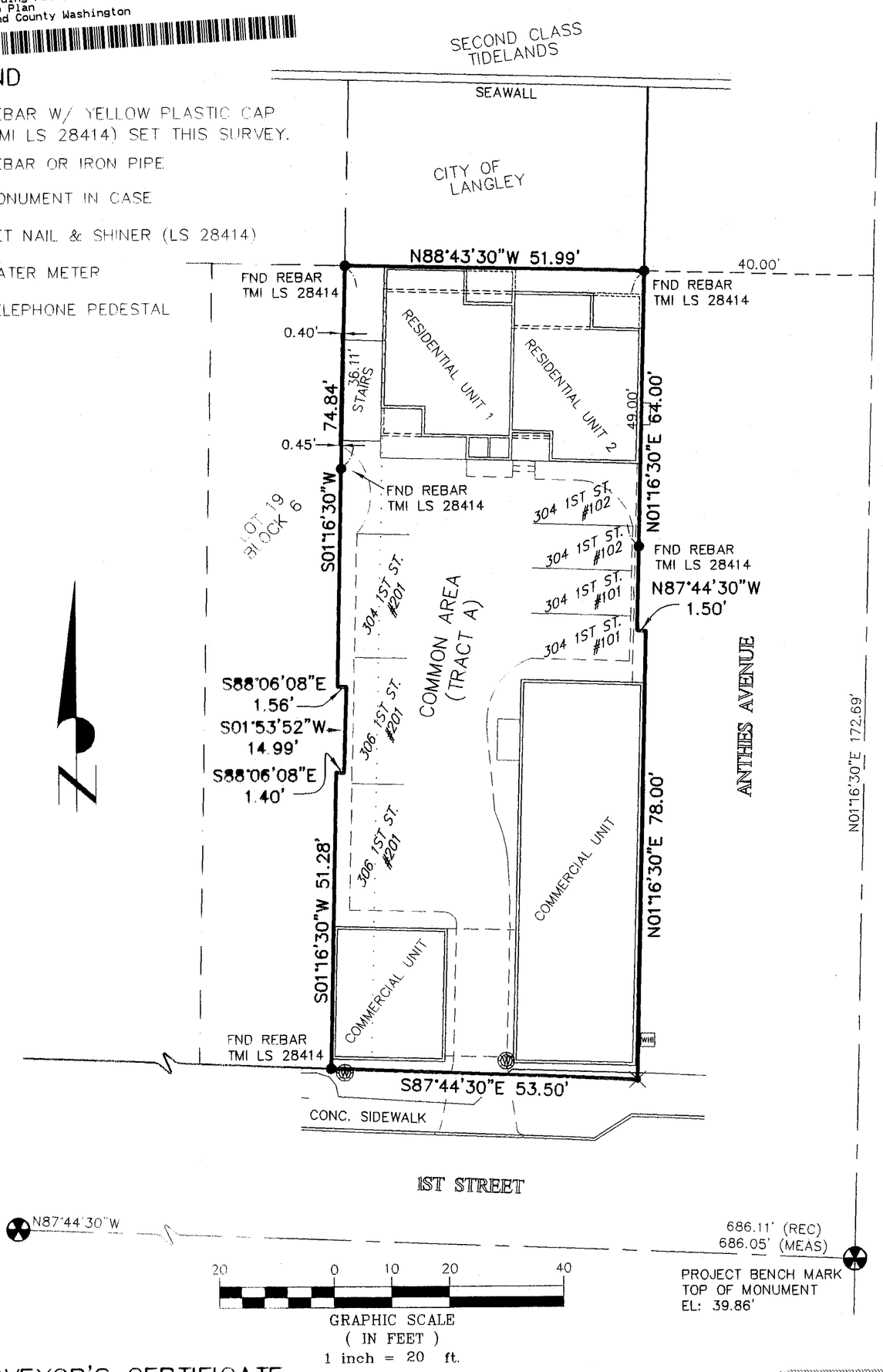

DEDICATION

THE UNDERSIGNED OWNER(S) IN FEE SIMPLE ("DECLARANT") HEREBY DECLARE THIS SURVEY MAP AND PLANS AND DEDICATE THE SAME FOR CONDOMINIUM PURPOSES. THIS SURVEY MAP AND PLANS AND ANY PORTION THEREOF SHALL BE RESTRICTED BY THE TERMS OF THE CONDOMINIUM DECLARATION FILED CONTEMPORANEOUSLY HEREWITHIN. THIS DEDICATION IS NOT FOR ANY OTHER USE THAN TO MEET THE REQUIREMENTS OF THE WASHINGTON CONDOMINIUM ACT FOR A SURVEY AND PLANS AND TO SUBMIT THE PROPERTY TO THE ACT AS PROVIDED IN THE DECLARATION.

M. Douglas Kelly, managing member
DECLARANT: TWO TOTEMS, LLC

ACKNOWLEDGMENT

STATE OF WASHINGTON)
COUNTY OF ISLAND)SS

THIS IS TO CERTIFY THAT ON THIS 14 DAY OF July, 2008 BEFORE ME THE UNDERSIGNED, A NOTARY PUBLIC IN AND FOR THE STATE OF WASHINGTON, DULY COMMISSIONED, PERSONALLY APPEARED M. DOUGLAS KELLY, RESPECTIVELY OF MANAGING MEMBER OF TWO TOTEMS LLC A WASHINGTON LIMITED LIABILITY CORPORATION, THAT THEY EXECUTED THE FOREGOING INSTRUMENT, AND ACKNOWLEDGED SAID INSTRUMENT TO BE THE FREE AND VOLUNTARY ACT AND DEED OF SAID CORPORATION FOR THE USES AND PURPOSES THEREIN MENTIONED, AND ON OATH STATED THAT THEY ARE AUTHORIZED TO EXECUTE SAID INSTRUMENT.

NOTARY PUBLIC IN AND FOR THE STATE OF WASHINGTON,
RESIDING AT Coupeville
MY APPOINTMENT EXPIRES 9-21-2011

JERRY G. MORRISON
Commission Expires
NOTARY PUBLIC
09-21-2011
STATE OF WASHINGTON

ACKNOWLEDGMENT

STATE OF WASHINGTON)
COUNTY OF ISLAND)SS

I CERTIFY THAT I KNOW OR HAVE SATISFACTORY EVIDENCE THAT L. SHAYNE THATCHER IS THE PERSON WHO APPEARED BEFORE ME, & SAID PERSON ACKNOWLEDGED THAT SAID PERSON WAS AUTHORIZED TO SIGN THIS INSTRUMENT AND ACKNOWLEDGED IT TO BE SAID PERSON'S FREE AND VOLUNTARY ACT FOR THE USES AND PURPOSES MENTIONED IN THE INSTRUMENT.
DATED THIS 14 DAY OF July, 2008.

NOTARY PUBLIC IN AND FOR THE STATE OF WASHINGTON
RESIDING AT Freeland
MY APPOINTMENT EXPIRES 9-21-2011

ISLAND COUNTY COUNTY AUDITOR STATE OF WASHINGTON

JERRY G. MORRISON
Commission Expires
NOTARY PUBLIC
09-21-2011
STATE OF WASHINGTON

AUDITORS CERTIFICATE

FILED FOR RECORD THIS 16 DAY OF July 2008, AT 1:45 P.M., UNDER AUDITOR'S FILE NO. 4232958, RECORDS OF ISLAND COUNTY, WASHINGTON, AT THE REQUEST OF TWO TOTEMS, LLC.

Shiloh Crider by Robin Corum
ISLAND COUNTY AUDITOR DEPUTY AUDITOR

TREASURER'S CERTIFICATE

ALL TAXES LEVIED WHICH HAVE BECOME A LIEN UPON THE LANDS HEREIN DESCRIBED HAVE BEEN FULLY PAID AND DISCHARGED ACCORDING TO THE RECORDS OF MY OFFICE, INCLUDING TAXES FOR THE CURRENT YEAR, 2008.
C Root, 7/16/08 Dept
ISLAND COUNTY TREASURER

TREASURER OFFICIAL ISLAND COUNTY WASH.

LEGAL DESCRIPTION

(PER BOUNDARY LINE ADJUSTMENT, AFN 428743)

LOT 20 AND THE EAST 7 FEET OF LOT 19, BLOCK 6, REPLAT OF THE TOWN OF LANGLEY, AS PER PLAT RECORDED IN VOLUME 2 OF PLATS, PAGE 15, RECORDS OF ISLAND COUNTY, WASHINGTON.

TOGETHER WITH SECOND CLASS TIDELANDS, AS CONVEYED BY THE STATE OF WASHINGTON, SITUATE IN FRONT OF, ADJACENT TO OR ABUTTING THEREON, IF ANY.

EXCEPT THAT PORTION LYING NORTHERLY OF THE FOLLOWING DESCRIBED LINE:

COMMENCING AT THE SOUTHEAST CORNER OF SAID LOT 20, BLOCK 6; THENCE NORTHERLY ALONG THE EAST LINE OF SAID LOT 20, A DISTANCE OF 142 FEET TO THE TRUE POINT OF BEGINNING OF HEREIN DESCRIBED LINE; THENCE WESTERLY AND PERPENDICULAR TO THE AFORESAID EAST LINE OF LOT 20 TO AN INTERSECTION WITH THE NORTH AND SOUTH CENTERLINE OF SAID LOT 17, BLOCK 6 EXTENDED, SAID INTERSECTION BEING THE TERMINUS OF THE HEREIN DESCRIBED LINE.

AND EXCEPT ALL THAT PART OF THE EAST 7 FEET OF LOT 19, BLOCK 6 OF THE REPLAT OF THE TOWN OF LANGLEY, AS RECORDED IN VOLUME 2 OF PLATS, PAGE 15, RECORDS OF ISLAND COUNTY, WASHINGTON, DESCRIBED AS FOLLOWS:

COMMENCING AT THE SOUTHWEST CORNER OF THE EAST 7 FEET OF SAID LOT 19; THENCE N 1°16'30", ALONG THE WEST LINE OF SAID EAST 7 FEET, A DISTANCE OF 51.28 FEET TO THE POINT OF BEGINNING; THENCE S 88°06'08" E, A DISTANCE OF 1.40 FEET; THENCE N 1°53'52" E, A DISTANCE OF 14.99 FEET; THENCE N 88°06'08" W, A DISTANCE OF 1.56 FEET; THENCE S 1°16'30" W, A DISTANCE OF 14.99 FEET TO THE POINT OF BEGINNING.

TOGETHER WITH THAT PORTION OF VACATED ANTHES AVENUE ADJOINING, WHICH UPON VACATION BY INSTRUMENT RECORDED AS AUDITOR'S FILE NO. 4082433, ATTACHED TO SAID PROPERTY.

SITUATE IN THE COUNT OF ISLAND, STATE OF WASHINGTON.

BASIS OF BEARING

THE BASIS OF BEARING FOR THIS SURVEY IS N87°44'30"W BETWEEN SURVEY MONUMENTS FOUND ON THE CENTERLINE OF FIRST STREET, PER RECORD OF SURVEY, BK. 10, PG. 368.

SURVEY REFERENCES

RECORD OF SURVEY, RECORDED IN BOOK 10 OF SURVEYS, PAGE 368, RECORDS OF ISLAND COUNTY, WASHINGTON.

REPLAT OF TOWN OF LANGLEY, RECORDED IN VOLUME 6 OF PLATS, PAGE 33, RECORDS OF ISLAND COUNTY, WASHINGTON.

BOUNDARY LINE ADJUSTMENT, RECORDED UNDER AUDITOR'S FILE NO. 4218743, RECORDS OF ISLAND COUNTY, WASHINGTON.

EQUIPMENT & PROCEDURES

EQUIPMENT USED: ELECTRONIC TOTAL STATION
METHOD OF SURVEY: FIELD TRAVERSE

NOTE

ALL AREAS ON THIS LOT THAT DO NOT FALL WITHIN THE INTERIOR OF THE UNITS AND ARE NOT A NUMBERED PARKING STALL ARE GENERAL COMMON ELEMENTS.

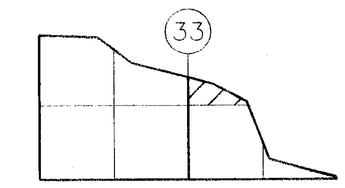

SEC. 34, TWP. 30 N., RNG. 2 E., W.M.

SURVEYOR'S CERTIFICATE

I, L. SHAYNE THATCHER, HEREBY CERTIFY THAT THIS SURVEY MAP AND PLANS FOR TWO TOTEMS CONDOMINIUMS, IS BASED UPON AN ACTUAL SURVEY OF THE PROPERTY, THAT ALL INFORMATION REQUIRED BY RCW 64.34.23.232(1) IS SUPPLIED THEREIN, AND THAT THE HORIZONTAL AND VERTICAL BOUNDARIES OF THE UNITS ARE SUBSTANTIALLY COMPLETED IN ACCORDANCE WITH SAID PLANS. THIS IS TO CERTIFY FURTHER THAT THIS MAP REPRESENTS A SURVEY MADE BY ME IN CONFORMANCE WITH THE REQUIREMENTS OF THE SURVEY RECORDING ACT AT THE REQUEST OF TWO TOTEMS, LLC.

7-8-08
L. SHAYNE THATCHER DATE
CERTIFICATE NO. 28414

SHAYNE THATCHER STATE OF WASHINGTON 28414 REGISTERED PROFESSIONAL LAND SURVEYOR EXPIRES: 9/13/08
7-8-08

FOR: TWO TOTEMS, LLC	
SCALE: 1" = 20'	
APPROVED BY: LST	
DRAWN BY: RLS	
F.B. No. SEE FILE	
DRAWING No. 7122	
SHEET 1 OF 6	

TMI

CONDOMINIUM PLAT OF A PORTION OF THE NW 1/4 OF THE SE 1/4 OF SEC. 34, TWP. 30 N., RNG. 2 E., W.M.

Island County Washington

Thatcher & Morrison, Inc.
P.O. box 1011
1796 Main Street, Suite 105
Freeland, Washington 98249
360-331-7393 Fax 360-331-7394

TWO TOTEMS CONDOMINIUMS

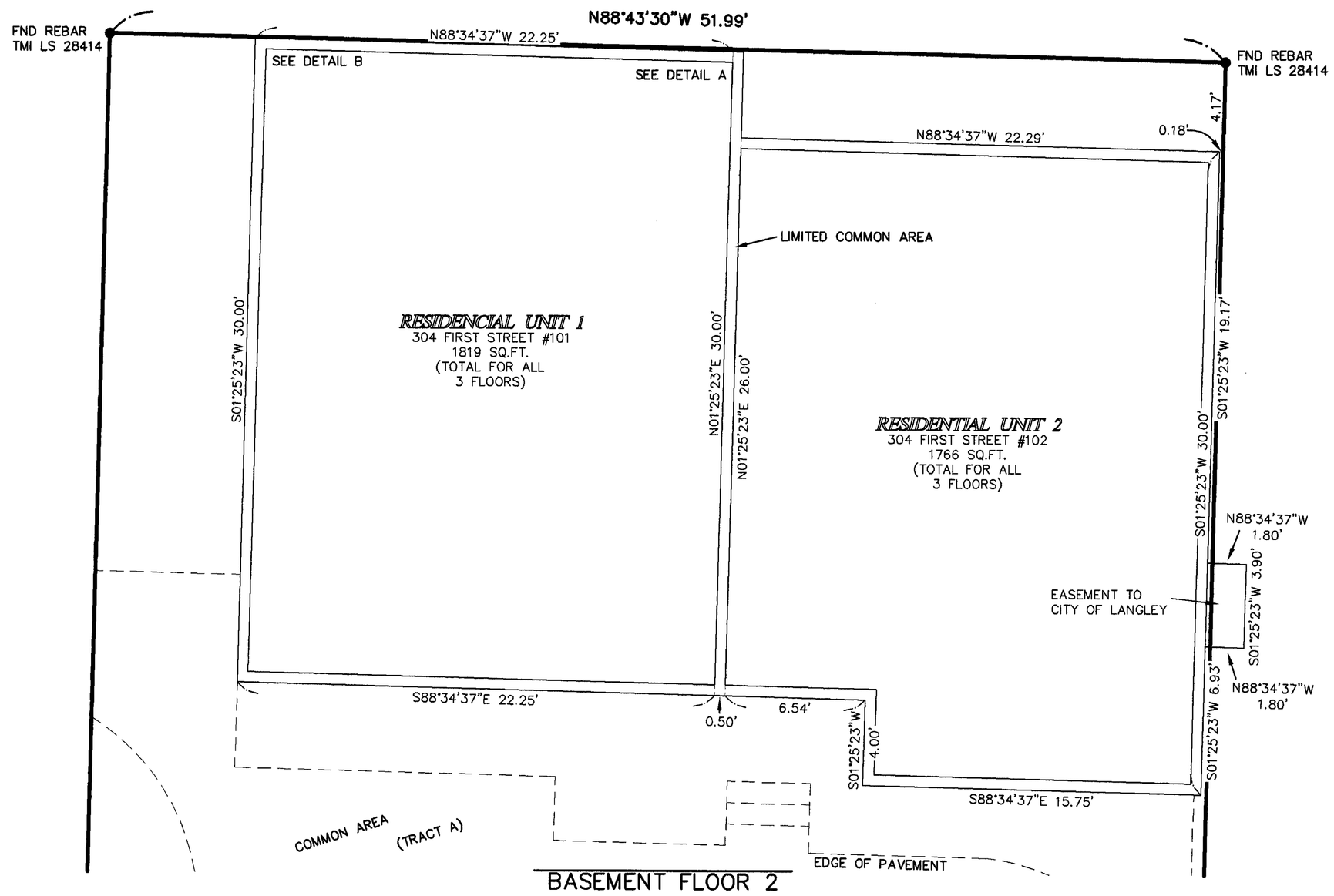

BASEMENT FLOOR 2

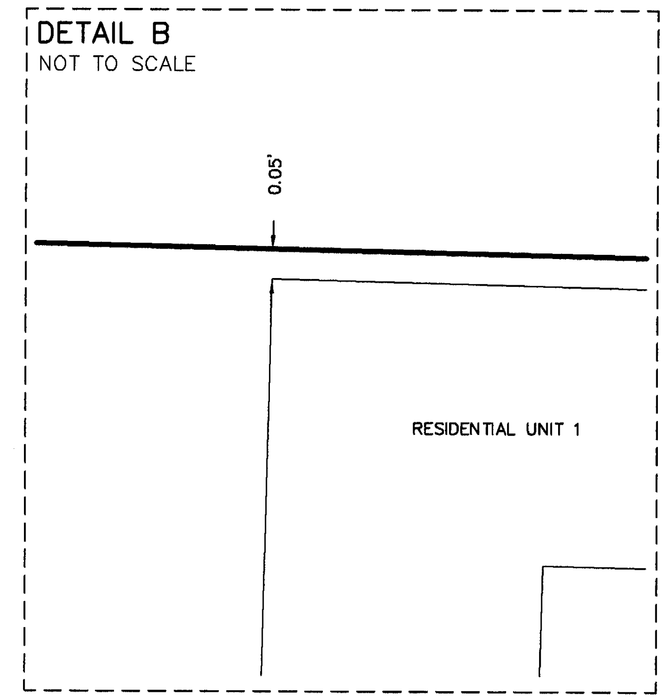

07/16/2008 01:45:15 PM 4232958
Recording Fee $133.00 Page 2 of 6
Condo Plan
Island County Washington

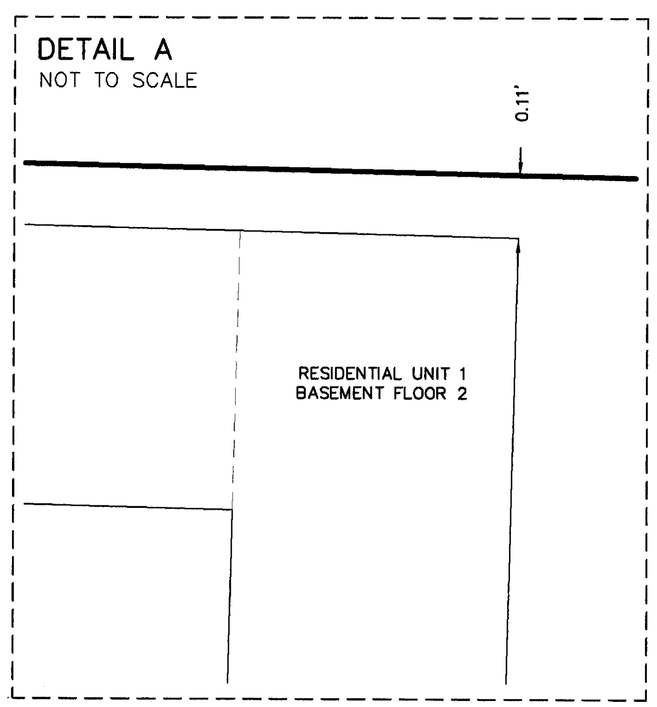

ADDRESS	PERCENTATE INTEREST
302 FIRST STREET	9.42 %
304 FIRST STREET, #101	26.09 %
304 FIRST STREET, #102	26.09 %
304 FIRST STREET, #201	17.39 %
306 FIRST STREET, #101	3.62 %
306 FIRST STREET, #201	17.39 %

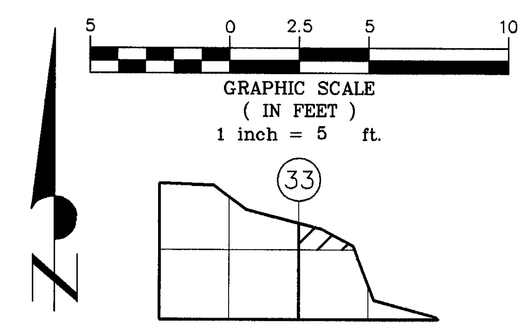

SEC. 34, TWP. 30 N., RNG. 2 E., W.M.

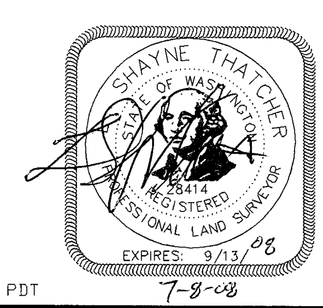

7-8-08

FOR: TWO TOTEMS, LLC.	
SCALE: 1" = 5'	
APPROVED BY: LST	
DRAWN BY: RLS	
F.B. No. SEE FILE	
DRAWING No. 7122	
SHEET 2 OF 6	

TMI

CONDOMINIUM PLAT OF A PORTION OF THE
NW 1/4 OF THE SE 1/4 OF
SEC. 34, TWP. 30 N., RNG. 2 E., W.M.

Island County **Washington**

Thatcher & Morrison, Inc.
P.O. box 1011
1796 Main Street, Suite 105
Freeland, Washington 98249
360-331-7393 Fax 360-331-7394

T:\TMI\DATA\Land Projects\7100-7199\7122Boone\dwg\7122TwoTotems.dwg 7/7/2008 3:08:00 PM PDT

TWO TOTEMS CONDOMINIUMS

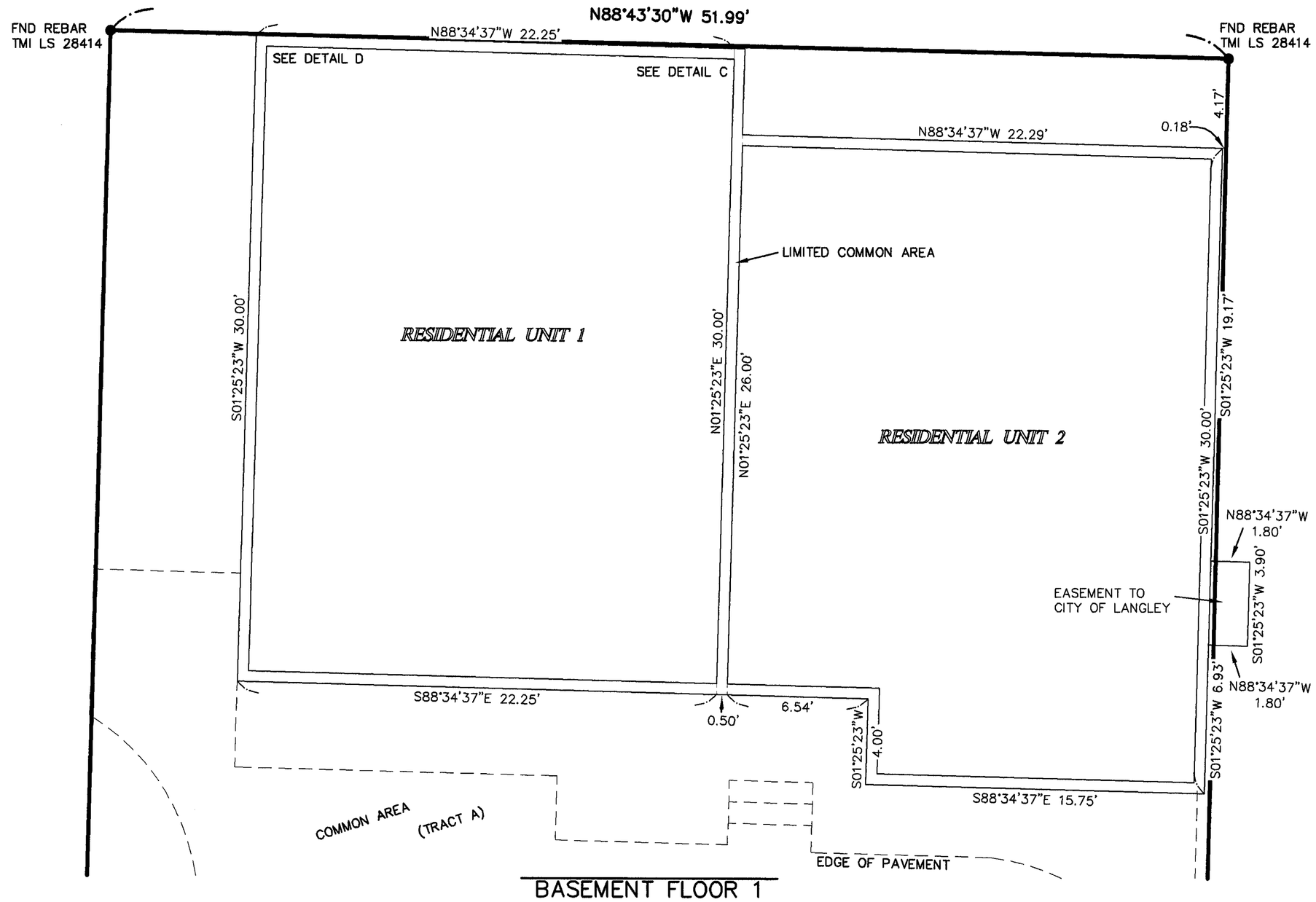

BASEMENT FLOOR 1

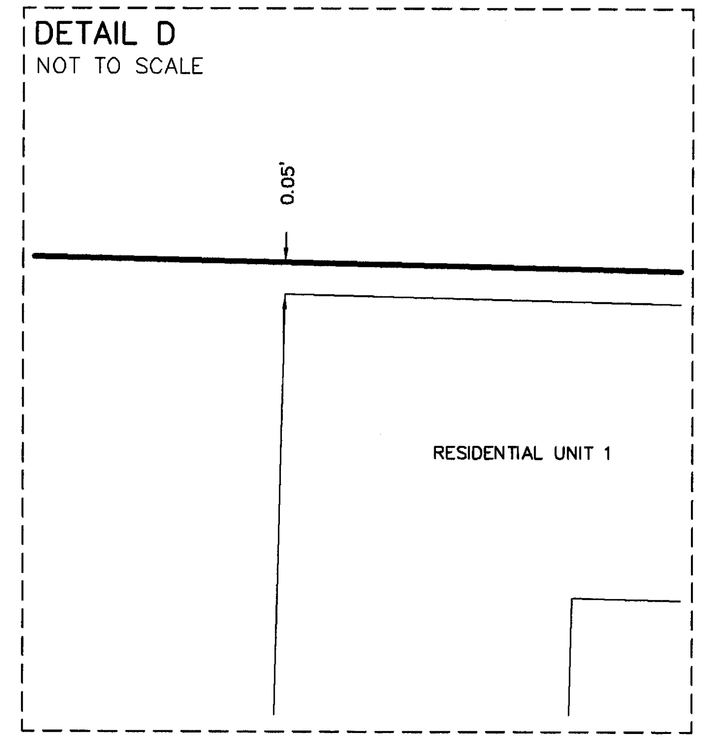

07/16/2008 01:45:15 PM 4232958
Recording Fee $133.00 Page 3 of 6
Condo Plan
Island County Washington

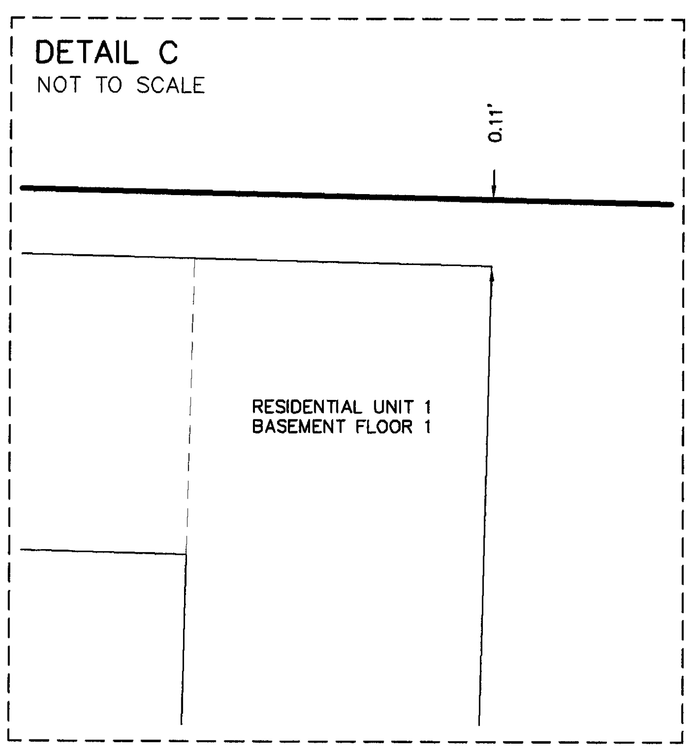

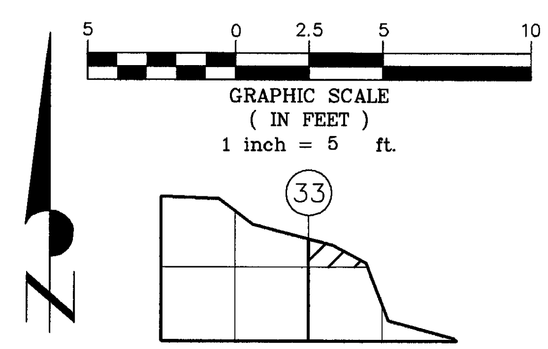

SEC. 34, TWP. 30 N., RNG. 2 E., W.M.

SHAYNE THATCHER
STATE OF WASHINGTON
26414
REGISTERED
PROFESSIONAL LAND SURVEYOR
EXPIRES: 9/13/08
7-8-08

FOR: TWO TOTEMS, LLC.	
SCALE: 1" = 5'	
APPROVED BY: LST	
DRAWN BY: RLS	
F.B. No. SEE FILE	
DRAWING No. 7122	
SHEET 3 OF 6	

TMI

CONDOMINIUM PLAT OF A PORTION OF THE
NW 1/4 OF THE SE 1/4 OF
SEC. 34, TWP. 30 N., RNG. 2 E., W.M.

Island County **Washington**

Thatcher & Morrison, Inc.
P.O. box 1011
1796 Main Street, Suite 105
Freeland, Washington 98249
360-331-7393 Fax 360-331-7394

T:\TMI\DATA\Land Projects\7100-7199\7122Boone\dwg\7122TwoTotems.dwg 7/7/2008 3:18:12 PM PDT

TWO TOTEMS CONDOMINIUMS

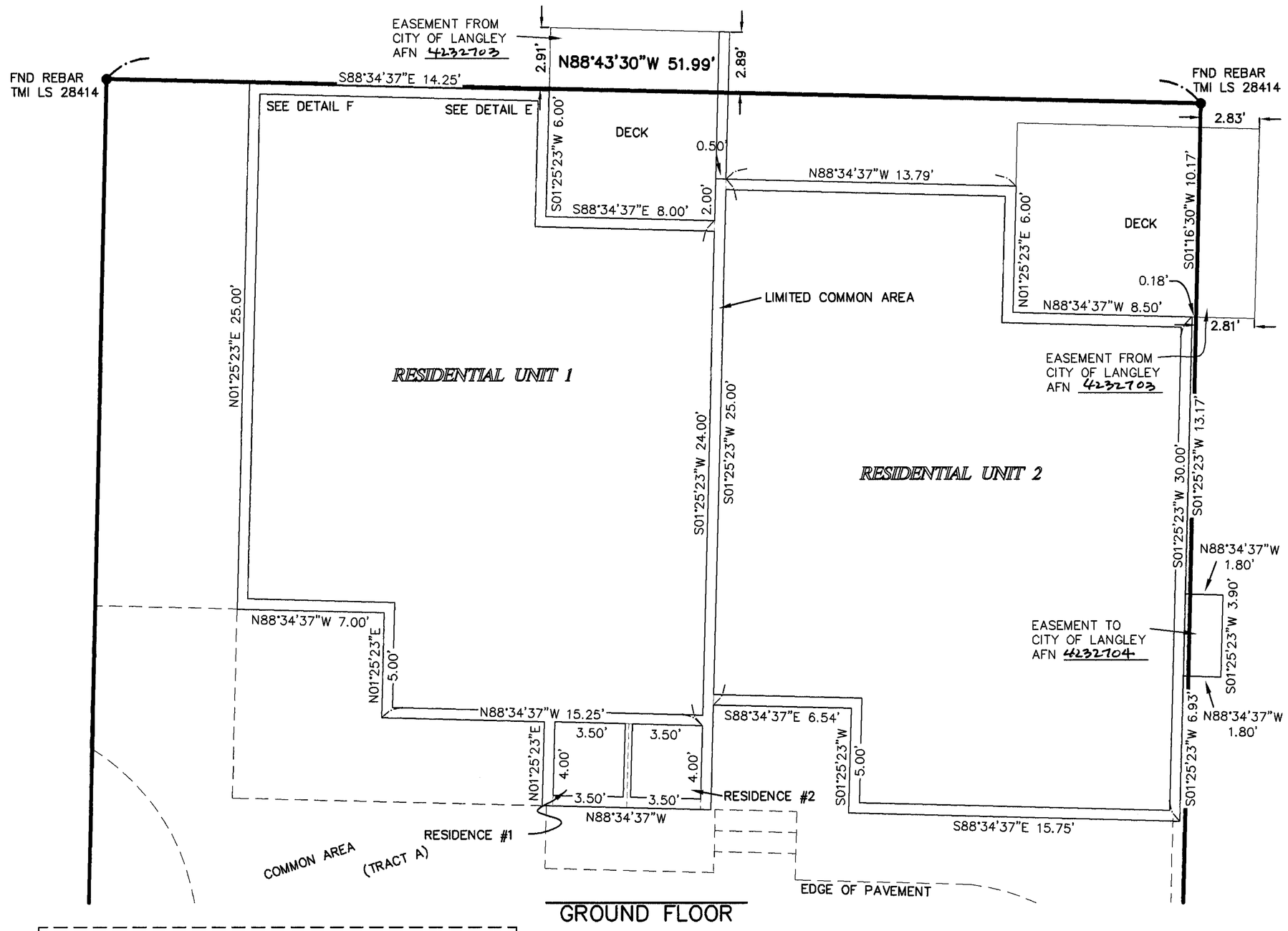

GROUND FLOOR

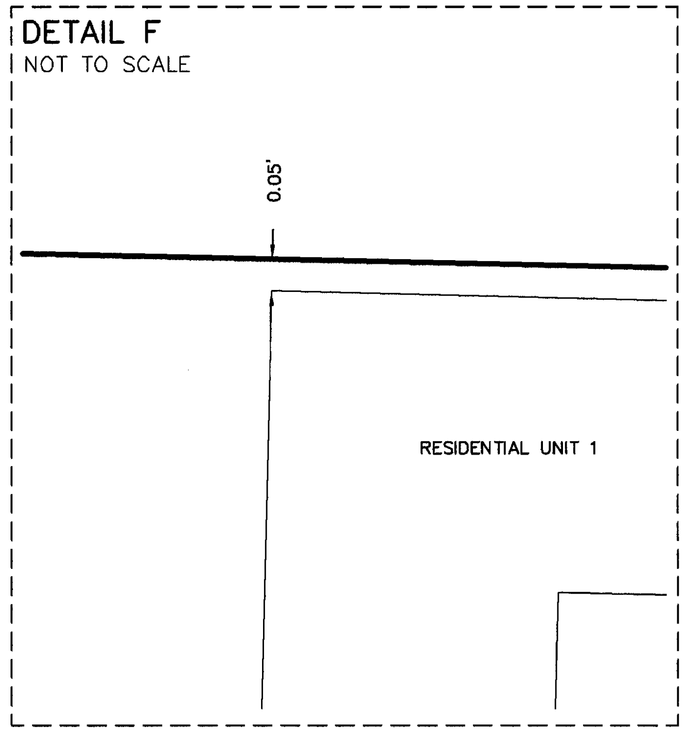

07/16/2008 01:45:15 PM 4232958
Recording Fee $133.00 Page 4 of 6
Condo Plan
Island County Washington

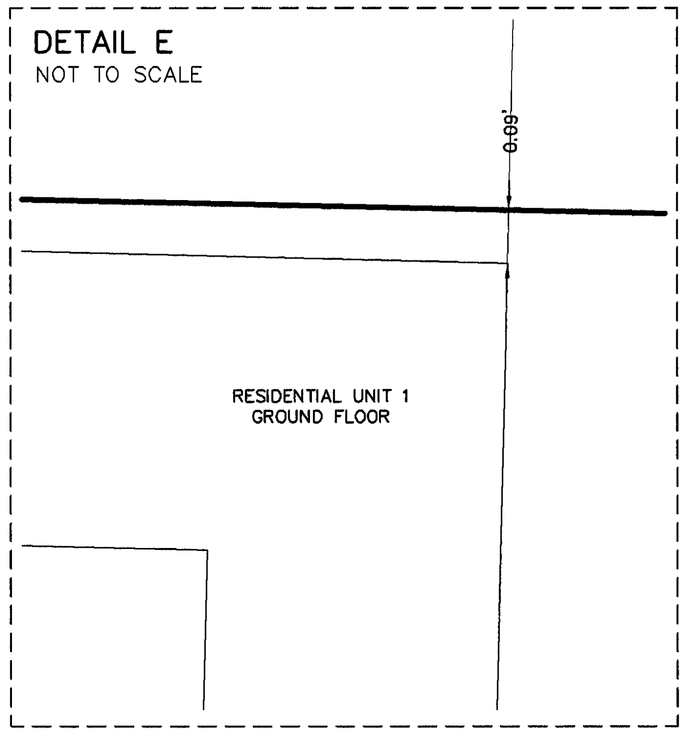

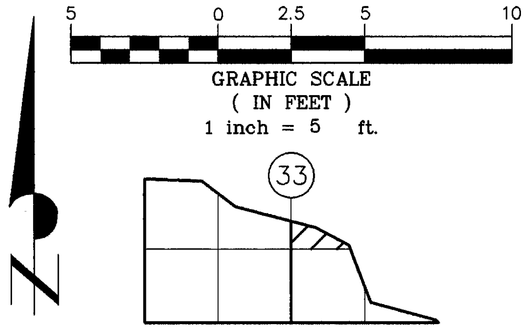

SEC. 34, TWP. 30 N., RNG. 2 E., W.M.

SHAYNE THATCHER
STATE OF WASHINGTON
28414
REGISTERED
PROFESSIONAL LAND SURVEYOR
EXPIRES: 9/13/08
7-9-08

FOR: TWO TOTEMS, LLC.	
SCALE: 1" = 40'	
APPROVED BY: LST	
DRAWN BY: RLS	
F.B. No. SEE FILE	
DRAWING No. 7122	
SHEET 4 OF 6	

TMI

CONDOMINIUM PLAT OF A PORTION OF THE NW 1/4 OF THE SE 1/4 OF SEC. 34, TWP. 30 N., RNG. 2 E., W.M.

Island County **Washington**

Thatcher & Morrison, Inc.
P.O. box 1011
1796 Main Street, Suite 105
Freeland, Washington 98249
360-331-7393 Fax 360-331-7394

T:\TMI\DATA\Land Projects\7100-7199\7122Boone\dwg\7122TwoTotems.dwg 7/9/2008 10:27:43 AM PDT

TWO TOTEMS CONDOMINIUMS

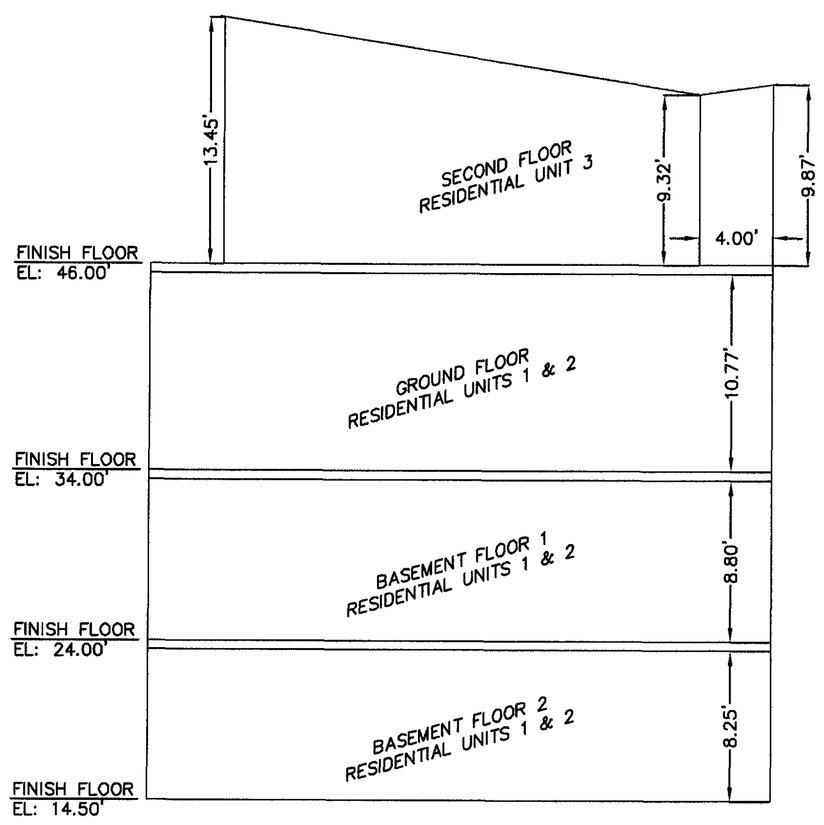

VERTICAL DETAIL
RESIDENCE 1 & 2

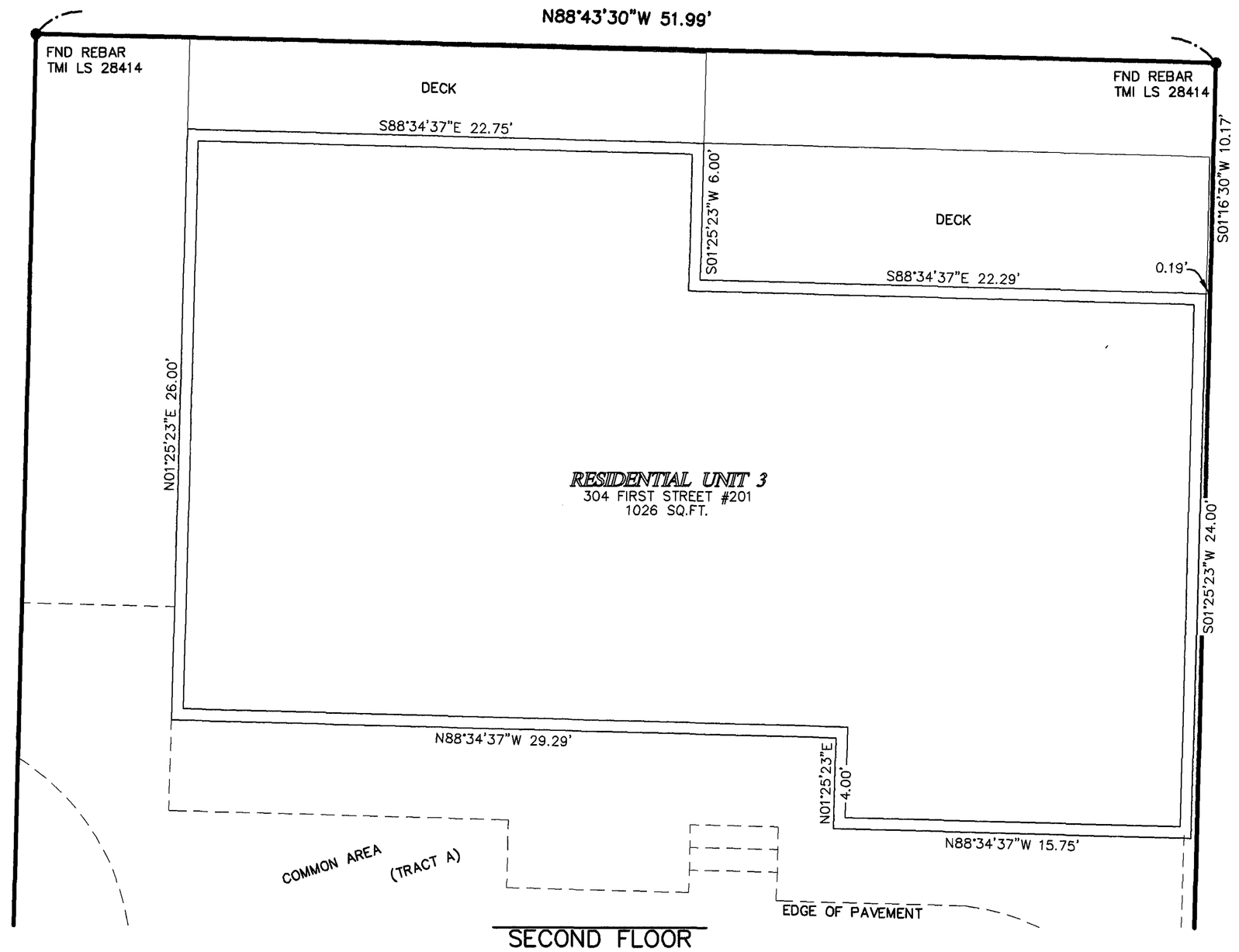

SECOND FLOOR

07/16/2008 01:45:15 PM 4232958
Recording Fee $133.00 Page 5 of 6
Condo Plan
Island County Washington

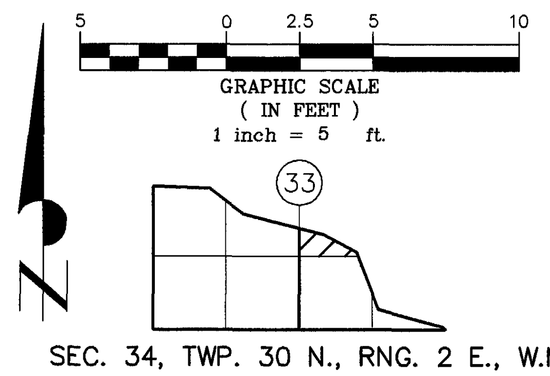

SEC. 34, TWP. 30 N., RNG. 2 E., W.M.

FOR: TWO TOTEMS, LLC.	
SCALE: 1" = 5'	
APPROVED BY: LST	
DRAWN BY: RLS	
F.B. No. SEE FILE	
DRAWING No. 7122	
SHEET 5 OF 6	

TMI

CONDOMINIUM PLAT OF A PORTION OF THE
NW 1/4 OF THE SE 1/4 OF
SEC. 34, TWP. 30 N., RNG. 2 E., W.M.

Island County **Washington**

Thatcher & Morrison, Inc.
P.O. box 1011
1796 Main Street, Suite 105
Freeland, Washington 98249
360-331-7393 Fax 360-331-7394

T:\TMI\DATA\Land Projects\7100-7199\7122Boone\dwg\7122TwoTotems.dwg 7/7/2008 3:58:48 PM PDT

TWO TOTEMS CONDOMINIUMS

07/16/2008 01:45:15 PM 4232958
Recording Fee $133.00 Page 6 of 6
Condo Plan
Island County Washington

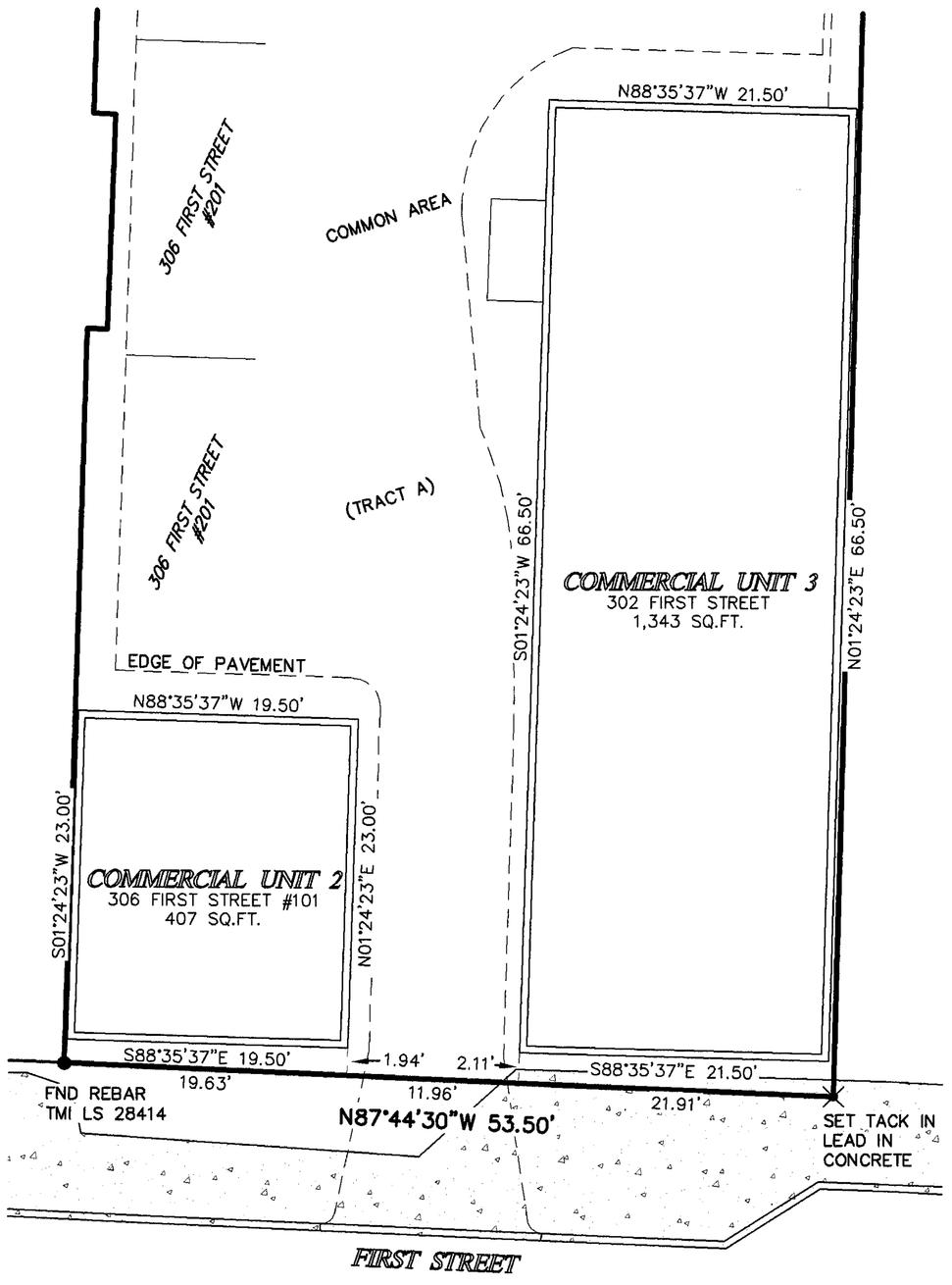

GROUND FLOOR

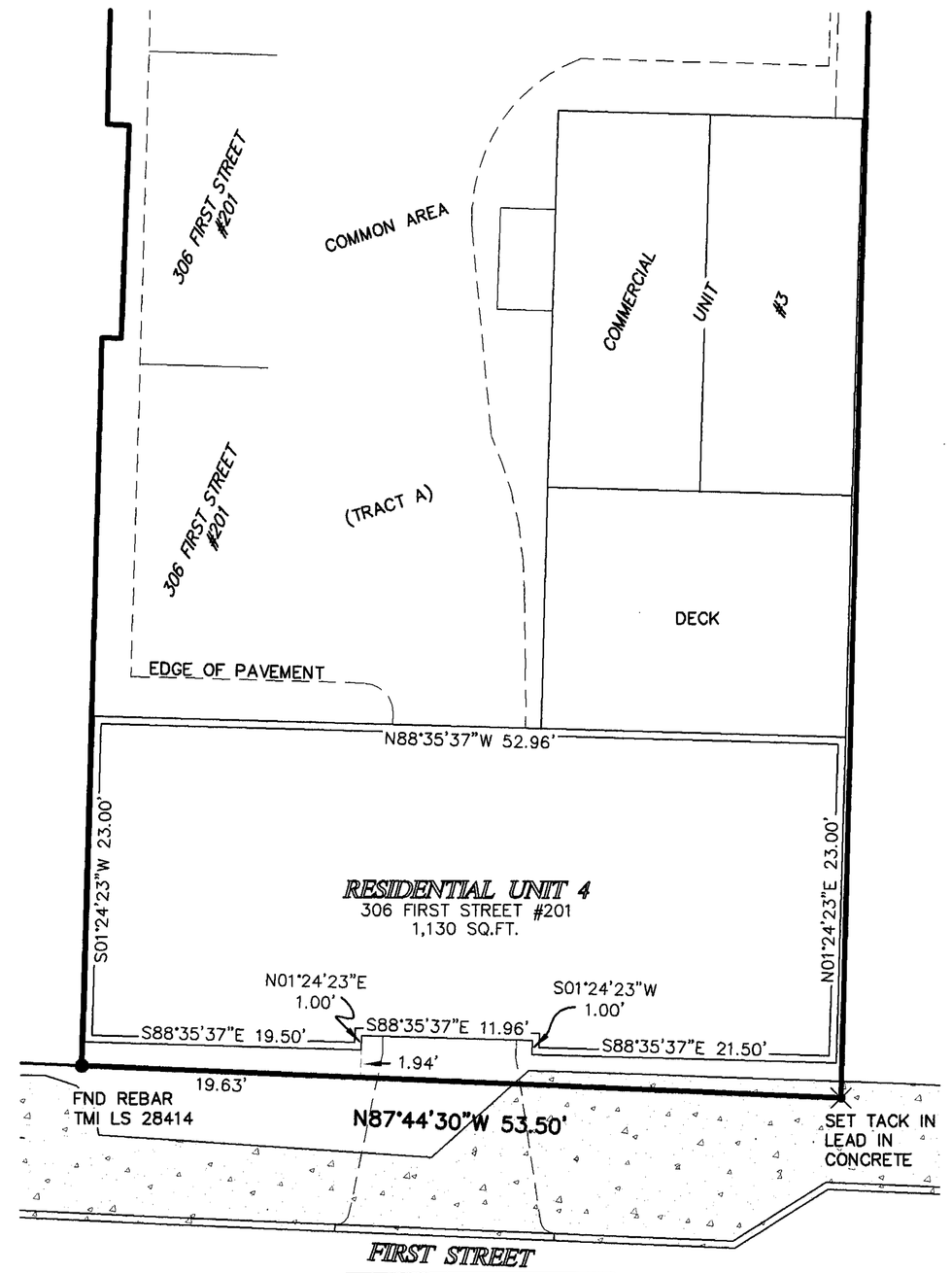

SECOND FLOOR

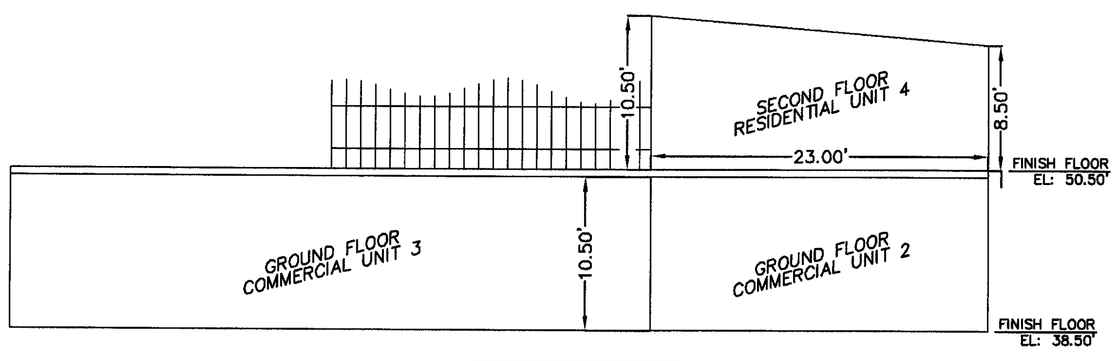

VERTICAL DETAIL
RETAIL SPACE 2 & 3
& RESICENCE 3

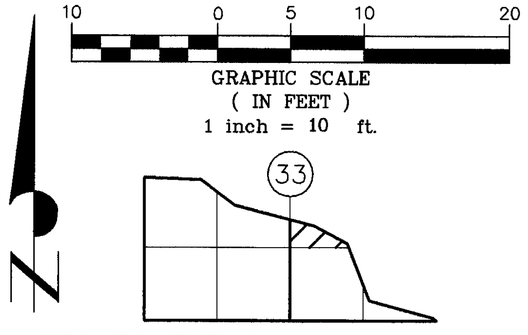

SEC. 34, TWP. 30 N., RNG. 2 E., W.M.

FOR: TWO TOTEMS, LLC.	
SCALE: 1" = 10'	
APPROVED BY: LST	
DRAWN BY: RLS	
F.B. No. SEE FILE	
DRAWING No. 7122	
SHEET 6 OF 6	

TMI

CONDOMINIUM PLAT OF A PORTION OF THE
NW 1/4 OF THE SE 1/4 OF
SEC. 34, TWP. 30 N., RNG. 2 E., W.M.

Island County **Washington**

Thatcher & Morrison, Inc.
P.O. box 1011
1796 Main Street, Suite 105
Freeland, Washington 98249
360-331-7393 Fax 360-331-7394

T:\TMI\DATA\Land Projects\7100-7199\7122Boone\dwg\7122TwoTotems.dwg 7/7/2008 4:09:23 PM PDT